SECTION TF

TRANSFER

CONTENTS

PRECAUTIONS 3
Precautions for Supplemental Restraint System (SRS) "AIR BAG" and "SEAT BELT PRE-TENSIONER" 3
Precautions 3
Service Notice or Precautions 4
PREPARATION 5
Special Service Tools 5
Commercial Service Tools 7
NOISE, VIBRATION AND HARSHNESS (NVH) TROUBLESHOOTING 8
NVH Troubleshooting Chart 8
TRANSFER OIL 9
Changing Transfer Oil 9
DRAINING 9
FILLING 9
Checking Transfer Oil 9
OIL LEAKAGE AND OIL LEVEL 9
AWD SYSTEM 10
Power Transfer Diagram 10
System Description 10
ELECTRIC CONTROLLED COUPLING 10
AWD CONTROL UNIT 10
AWD MODE SWITCH 11
AWD INDICATOR LAMP AND LOCK INDICATOR LAMP 11
AWD WARNING LAMP 11
System Diagram 12
COMPONENTS FUNCTION DESCRIPTION 13
CAN Communication 13
SYSTEM DESCRIPTION 13
TROUBLE DIAGNOSIS 14
Fail-Safe Function 14
How to Perform Trouble Diagnosis 14
BASIC CONCEPT 14
Location of Electrical Parts 15
Circuit Diagram 16
Wiring Diagram — AWD — 17
Trouble Diagnosis Chart for Symptoms 20
AWD Control Unit Input/Output Signal Reference Values 21
AWD CONTROL UNIT INSPECTION TABLE 21
CONSULT-II Function (ALL MODE AWD/4WD) 22
FUNCTION 22
CONSULT-II SETTING PROCEDURE 22
SELF-DIAG RESULTS MODE 23
DATA MONITOR MODE 24
ACTIVE TEST MODE 25
AWD CONTROL UNIT PART NUMBER 25
TROUBLE DIAGNOSIS FOR SYSTEM 26
Power Supply Circuit for AWD Control Unit 26
CONSULT-II REFERENCE VALUE IN DATA MONITOR MODE 26
DIAGNOSTIC PROCEDURE 26
AWD Control Unit 27
DIAGNOSTIC PROCEDURE 27
ABS System 28
DIAGNOSTIC PROCEDURE 28
AWD Solenoid 28
CONSULT-II REFERENCE VALUE IN DATA MONITOR MODE 28
DIAGNOSTIC PROCEDURE 29
COMPONENT INSPECTION 31
AWD Actuator Relay 32
CONSULT-II REFERENCE VALUE IN DATA MONITOR MODE 32
DIAGNOSTIC PROCEDURE 32
AWD Mode Switch 33
CONSULT-II REFERENCE VALUE IN DATA MONITOR MODE 33
DIAGNOSTIC PROCEDURE 33
COMPONENT INSPECTION 35
Engine Control Signal 35
DIAGNOSTIC PROCEDURE 35
CAN Communication Line 36
DIAGNOSTIC PROCEDURE 36
TROUBLE DIAGNOSIS FOR SYMPTOMS 37
AWD Indicator Lamp and LOCK Indicator Lamp Do Not Turn ON for Approx. 1 Second When Ignition Switch Is Turned to ON 37

DIAGNOSTIC PROCEDURE 37
AWD Warning Lamp Does Not Turn ON When Ignition Switch Is Turned to ON 38
DIAGNOSTIC PROCEDURE 38
AWD Warning Lamp Does Not Turn OFF Several Seconds After Engine Started 39
DIAGNOSTIC PROCEDURE 39
AWD Mode Cannot Be Switched After Engine Is Started 40
DIAGNOSTIC PROCEDURE 40
Heavy Tight-Corner Braking Symptom Occurs When Vehicle Is Driven in AUTO Mode and Steering Wheel Is Turned Fully to Either Side after Engine Is Started 41
DIAGNOSTIC PROCEDURE 41
Vehicle Does Not Enter AWD Mode Even Though AWD Warning Lamp Turned to OFF 42
DIAGNOSTIC PROCEDURE 42
While Driving, AWD Warning Lamp Flashes Rapidly (When Flashing in Approx. 1 Minute and Then Turning OFF) 43
While Driving, AWD Warning Lamp Flashes Slowly (When Continuing to Flash Until Turning Ignition Switch OFF) 43
DIAGNOSTIC PROCEDURE 43
AWD CONTROL UNIT 45
Removal and Installation 45
REMOVAL 45
INSTALLATION 45
SIDE OIL SEAL 46
Removal and Installation 46
REMOVAL 46
INSTALLATION 46
AIR BREATHER HOSE 47
Components 47
Removal and Installation 47
TRANSFER ASSEMBLY 48
Removal and Installation 48
COMPONENTS 48
REMOVAL 48
INSTALLATION 49
Disassembly and Assembly 50
COMPONENTS 50
ASSEMBLY INSPECTION 51
DISASSEMBLY 55
INSPECTION AFTER DISASSEMBLY 59
SELECTING ADJUSTING SHIMS 60
ASSEMBLY 62
SERVICE DATA AND SPECIFICATIONS (SDS) 67
General Specifications 67
Inspection and Adjustment 67
PRELOAD TORQUE BEFORE DISASSEMBLY 67
PRELOAD TORQUE AFTER DISASSEMBLY AND REASSEMBLY 67
BACKLASH 67
COMPANION FLANGE RUNOUT 67
SELECTIVE PARTS 67

PRECAUTIONS

PFP:00001

Precautions for Supplemental Restraint System (SRS) “AIR BAG” and “SEAT BELT PRE-TENSIONER”

ADS0016Z

The Supplemental Restraint System such as “AIR BAG” and “SEAT BELT PRE-TENSIONER”, used along with a front seat belt, helps to reduce the risk or severity of injury to the driver and front passenger for certain types of collision. Information necessary to service the system safely is included in the SRS and SB section of this Service Manual.

WARNING:

- **To avoid rendering the SRS inoperative, which could increase the risk of personal injury or death in the event of a collision which would result in air bag inflation, all maintenance must be performed by an authorized NISSAN/INFINITI dealer.**
- **Improper maintenance, including incorrect removal and installation of the SRS, can lead to personal injury caused by unintentional activation of the system. For removal of Spiral Cable and Air Bag Module, see the SRS section.**
- **Do not use electrical test equipment on any circuit related to the SRS unless instructed to in this Service Manual. SRS wiring harnesses can be identified by yellow and/or orange harnesses or harness connectors.**

Precautions

ADS00170

- **Before connecting or disconnecting the AWD control unit harness connector, turn ignition switch “OFF” and disconnect battery negative cable from battery negative terminal. Because battery voltage is applied to AWD control unit even if ignition switch is turned “OFF”.**

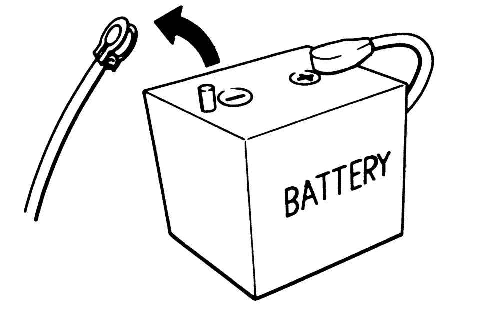

SEF289H

- **When connecting or disconnecting pin connectors into or from AWD control unit, take care not to damage pin terminals (bend or break).**
  When connecting pin connectors, make sure that there are no bends or breaks on AWD control unit pin terminal.

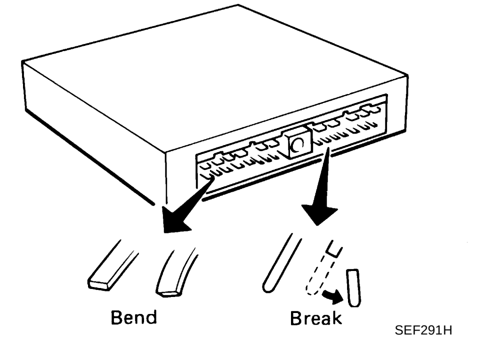

SEF291H

- **Before replacing AWD control unit, perform AWD control unit input/output signal inspection and make sure whether AWD control unit functions properly or not. Refer to TF-21, "AWD Control Unit Input/Output Signal Reference Values" .**

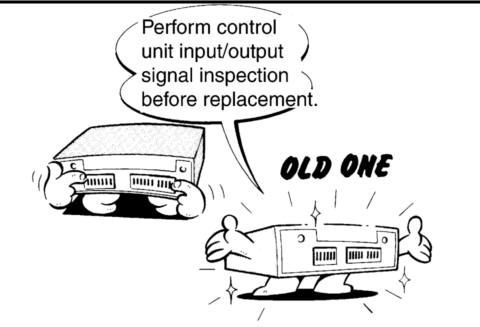

SDIA1848E

Service Notice or Precautions

ADS00171

- After overhaul refill the transfer with new transfer oil.
- Check the oil level or replace oil only with the vehicle parked on level surface.
- During removal or installation, keep inside of transfer clear of dust or dirt.
- Replace all tires at the same time. Always use tires of the proper size and the same brand and pattern. Fitting improper size and/or unusual wear tires applies excessive force to vehicle mechanism and can cause longitudinal vibration.
- Disassembly should be done in a clean work area.
- Before proceeding with disassembly, thoroughly clean the transfer. It is important to prevent the internal parts from becoming contaminated by dirt or other foreign matter.
- Check for the correct installation status prior to removal or disassembly. If matching marks are required, be certain they do not interfere with the function of the parts when applied.
- All parts should be carefully cleaned with a general purpose, non-flammable solvent before inspection or reassembly.
- Check appearance of the disassembled parts for damage, deformation, and unusual wear. Replace them with a new ones if necessary.
- Gaskets, seals, O-rings and lock nuts should be replaced any time when the transfer is disassembled.
- In principle, tighten bolts or nuts gradually in several steps working diagonally from inside to outside. If tightening sequence is specified, use it.
- Observe the specified torque when assembling.
- Clean and flush the parts sufficiently and blow-dry them.
- Be careful not to damage sliding surfaces and mating surfaces.
- Use lint-free cloth or towels for wiping parts clean. Common shop rags can leave fibers that could interfere with the operation of the transfer.

PREPARATION

PFP:00002

Special Service Tools

ADS00173

The actual shapes of Kent-Moore tools may differ from those of special service tools illustrated here.

Tool number (Kent-Moore No.) Tool name		Description
KV38101700 (—) Drift a: 82 mm (3.23 in) dia. b: 78 mm (3.07 in) dia.	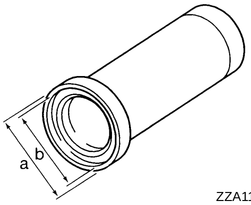 ZZA1149D	Installing side oil seal (installing adapter case oil seal)
ST3127S000 (J-25765-A) Preload gauge	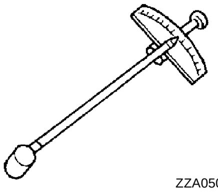 ZZA0503D	Measuring preload torque
ST33220000 (J-25804-01) Drift a: 37 mm (1.46 in) dia. b: 31 mm (1.22 in) dia. c: 22 mm (0.87 in) dia.	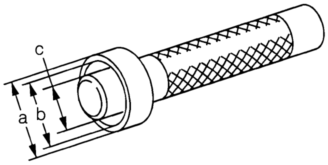 ZZA1046D	Removing drive pinion
KV381054S0 (J-34286) Puller	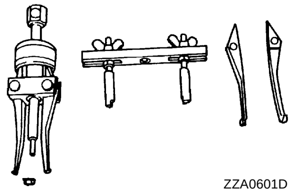 ZZA0601D	● Removing pinion rear bearing outer race ● Removing pinion front bearing outer race ● Removing gear ring oil seal
ST30031000 (J-22912-01) Replacer	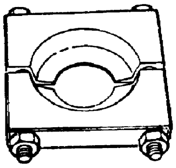 ZZA0700D	Removing pinion front bearing inner race
ST33200000 (J-26082) Drift a: 60 mm (2.36 in) dia. b: 44.5 mm (1.752 in) dia.	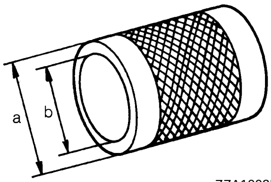 ZZA1002D	● Removing gear ring bearing inner race (adapter case side) ● Installing companion flange
ST33061000 (J-8107-2) Drift a: 38 mm (1.50 in) dia. b: 28.5 mm (1.122 in) dia.	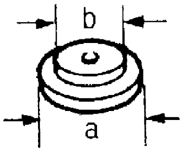 ZZA0810D	Removing gear ring bearing inner race (transfer case side)

Tool number (Kent-Moore No.) Tool name	Description
ST30720000 (J-25405) Drift a: 77 mm (3.03 in) dia. b: 55.5 mm (2.185 in) dia. 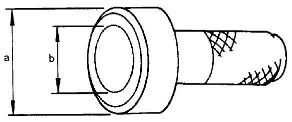 ZZA0811D	● Installing gear ring bearing outer race (transfer case side) ● Installing gear ring bearing inner race (transfer case side) ● Installing gear ring bearing inner race (adapter case side) ● Installing gear ring bearing outer race (adapter case side) ● Installing transfer case oil seal
KV40101840 (—) Drift a: 77 mm (3.03 in) dia. b: 85 mm (3.35 in) dia. 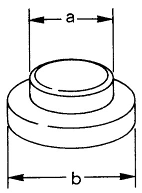 ZZA0881D	Installing gear ring bearing outer race (transfer case side)
ST33230000 (J-25805-01) Drift a: 51 mm (2.01 in) dia. b: 41 mm (1.61 in) dia. c: 28.5 mm (1.122 in) dia. 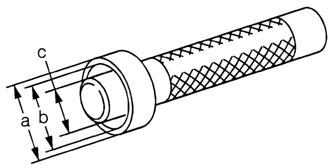 ZZA1046D	Installing gear ring oil seal
ST27863000 (—) Drift a: 74.5 mm (2.933 in) dia. b: 62.5 mm (2.461 in) dia. 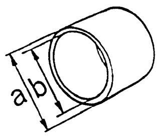 ZZA1003D	Installing gear ring bearing inner race (transfer case side)
KV40101630 (J-35870) Drift a: 68 mm (2.68 in) dia. b: 60 mm (2.36 in) dia. 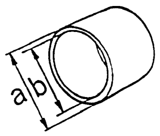 ZZA1003D	Installing gear ring bearing inner race (transfer case side)
KV38102510 (—) Drift a: 71 mm (2.80 in) dia. b: 65 mm (2.56 in) dia. 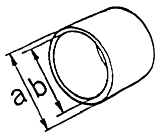 ZZA1003D	Installing gear ring bearing inner race (adapter case side)
KV40105230 (—) Drift a: 92 mm (3.62 in) dia. b: 86 mm (3.39 in) dia. 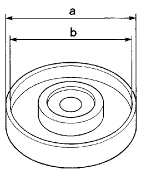 ZZA1141D	Installing gear ring bearing outer race (adapter case side)

Tool number (Kent-Moore No.) Tool name		Description
KV38100300 (J-25523) Drift a: 54 mm (2.13 in) dia. b: 46 mm (1.81 in) dia. c: 32 mm (1.26 in) dia.	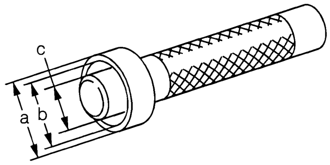 ZZA1046D	Installing pinion rear bearing outer race
ST33400001 (J-26082) Drift a: 60 mm (2.36 in) dia. b: 47 mm (1.85 in) dia.	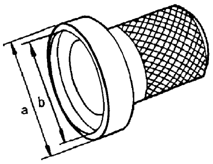 ZZA0814D	● Installing pinion front bearing outer race ● Installing pinion sleeve oil seal
ST30901000 (J-26010-01) Drift a: 79 mm (3.11 in) dia. b: 45 mm (1.77 in) dia. c: 35.2 mm (1.386 in) dia.	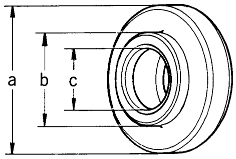 ZZA0978D	● Installing pinion front bearing outer race ● Installing pinion front bearing inner race

Commercial Service Tools

ADS00189

Tool name		Description
Power tool	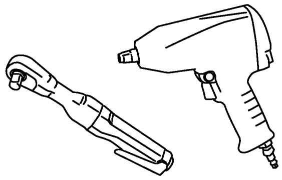 PBIC0190E	Loosening nuts and bolts

NOISE, VIBRATION AND HARSHNESS (NVH) TROUBLESHOOTING

PFP:00003

NVH Troubleshooting Chart

ADS00174

Use the chart below to help you find the cause of the symptom. The numbers indicate the order of the inspection. If necessary, repair or replace these parts.

Reference page		TF-9			TF-50	TF-50	TF-50	TF-59	TF-59
SUSPECTED PARTS (Possible cause)		TRANSFER OIL (Level low)	TRANSFER OIL (Wrong)	TRANSFER OIL (Level too high)	LIQUID GASKET (Damaged)	O-RING (Worn or damaged)	OIL SEAL (Worn or damaged)	GEAR (Worn or damaged)	BEARING (Worn or damaged)
Symptom	Noise	1	2					3	3
	Transfer oil leakage		3	1	2	2	2		

TRANSFER OIL

PFP:KLD30

Changing Transfer Oil

ADS00175

DRAINING

CAUTION:

When draining oil, protect exhaust tube with cover.

1. Run vehicle to warm up transfer body sufficiently.
2. Stop engine, and remove drain plug to drain transfer oil.
3. Apply sealant to drain plug. Install drain plug on transfer and tighten to the specified torque. Refer to TF-50, "COMPONENTS" .
   - **Use Genuine Silicone RTV or equivalent. Refer to GI-48, "Recommended Chemical Products and Sealants" .**

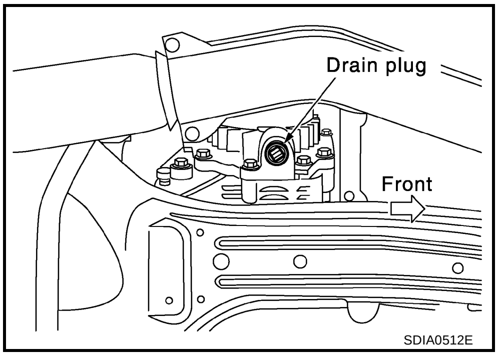

SDIA0512E

FILLING

1. Remove filler plug and add gear oil until oil level reaches the specified limit near filler plug mounting hole.

   Oil grade and Viscosity:

   Refer to MA-10, "Fluids and Lubricants" .

   Oil capacity:

   Approx. 0.31 ℓ (5/8 US pt, 1/2 Imp pt)

   CAUTION:

   Carefully fill oil. (Fill up for approx. 3 minutes)

2. Leave vehicle for 3 minutes, and check oil level again.
3. Apply sealant to filler plug. Install filler plug on transfer and tighten to the specified torque. Refer to TF-50, "COMPONENTS" .
   - **Use Genuine Silicone RTV or equivalent. Refer to GI-48, "Recommended Chemical Products and Sealants" .**

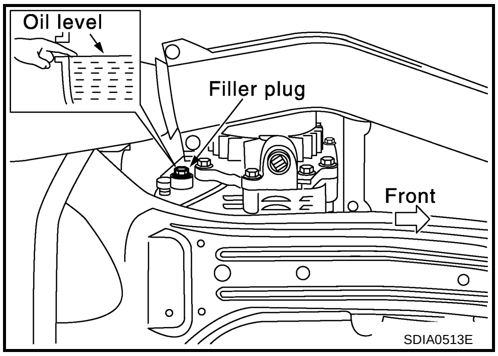

SDIA0513E

Checking Transfer Oil

ADS00176

OIL LEAKAGE AND OIL LEVEL

1. Check oil level from filler plug mounting hole as shown in the figure.

   CAUTION:

   Do not start engine while checking oil level.

2. Before installing filler plug, apply sealant. Install filler plug on transfer and tighten to the specified torque. Refer to TF-50, "COMPONENTS" .
   - **Use Genuine Silicone RTV or equivalent. Refer to GI-48, "Recommended Chemical Products and Sealants" .**

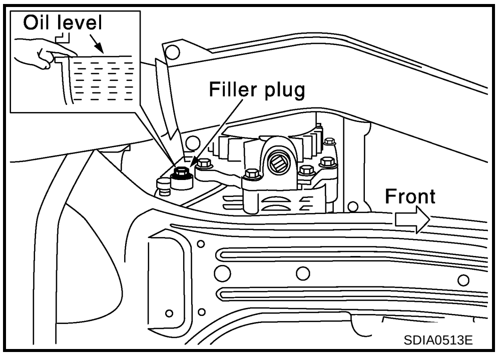

SDIA0513E

AWD SYSTEM

PFP:41650

Power Transfer Diagram

ADS00177

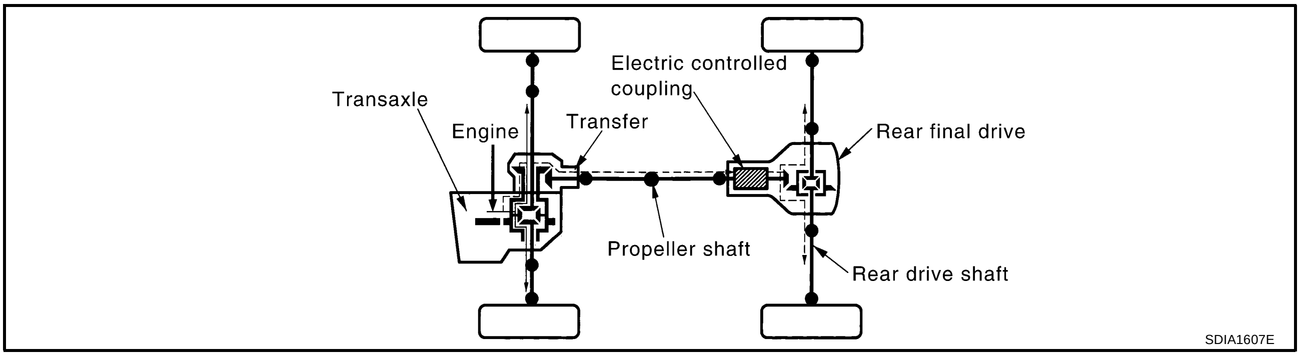

System Description

ADS00178

ELECTRIC CONTROLLED COUPLING

Operation Principle

1. The AWD control unit supplies command current to the electric controlled coupling (AWD solenoid).
2. The control clutch is engaged by the electromagnet and torque is detected in control clutch.
3. The cam operates in response to the control clutch torque and applies pressure to the main clutch.
4. The main clutch transmits torque to front wheels according to pressing power.

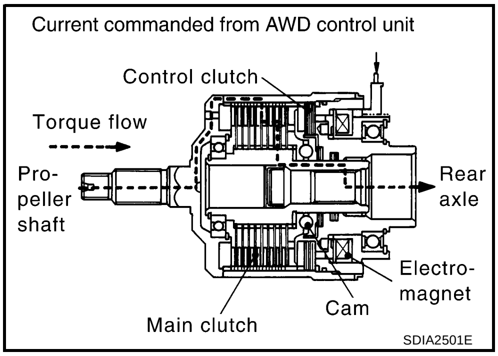

- Transmission torque to the rear wheels is determined according to command current.

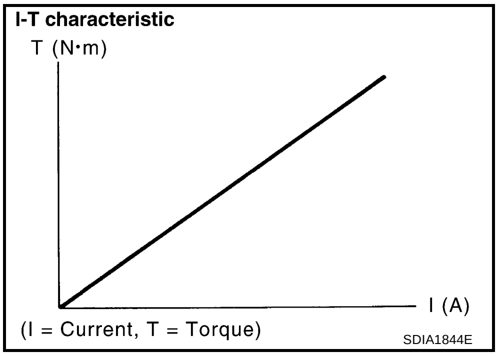

AWD CONTROL UNIT

- AWD control unit controls distribution of drive power between front-wheel drive (100:0) and AWD (50:50) conditions according to the signals from the sensors.
- Self-diagnosis results can be read with CONSULT-II.

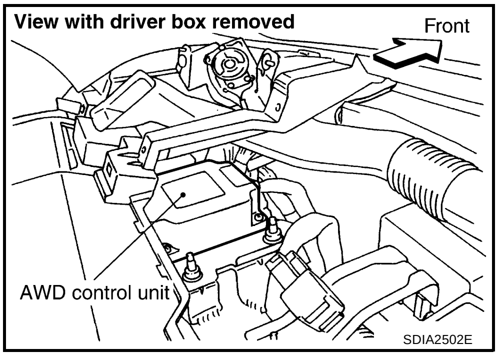

AWD MODE SWITCH

AUTO Mode

- Electronic control allows optimal distribution of torque to front/rear wheels to match road conditions.
- AWD mode makes possible stable driving, with no wheel spin, on snowy roads or other slippery surfaces.
- On roads which do not require AWD, AUTO mode contributes to improved fuel economy by driving in conditions close to front-wheel drive.
- Sensor inputs determine the vehicle's turning condition, and tight cornering/braking are controlled by distributing optimum torque to the rear wheels.

LOCK Mode

- Front/rear wheel torque distribution is fixed, ensuring stable driving when climbing slopes.
- AWD control unit will switch automatically to AUTO mode if vehicle speed increases. If vehicle speed then decreases, the vehicle automatically returns to direct 4-wheel driving conditions.
- LOCK mode will change to AUTO mode automatically, when the vehicle speed exceeds approx. 30 km/h (19 MPH). The LOCK indicator light keeps illuminating.

NOTE:
If there is a significant difference in pressure or wear between tires, full vehicle performance is not available. LOCK mode may be prohibited, or speeds at which LOCK mode is enabled may be restricted detecting tire conditions.

2WD Mode

Vehicle is in front-wheel drive.

NOTE:

- If front wheels are slipping in 2WD mode, do not switch to AUTO or LOCK. This can cause difficulties for the system.
- Even if the AWD mode switch is in 2WD mode, the AWD control unit occasionally automatically change to AUTO mode depending on the driving condition (For example; Depressing the acceleration firmly). This is not malfunction. However, AWD indicator lamp dose not illuminate.

AWD INDICATOR LAMP AND LOCK INDICATOR LAMP

The following is the indications of indicator lamp.

Condition	AWD indicator lamp	LOCK indicator lamp
AUTO mode	ON	OFF
LOCK mode	ON	ON
2WD mode	OFF	OFF
Lamp check	Turns ON for approx. 1 second when ignition switch is turned ON.	

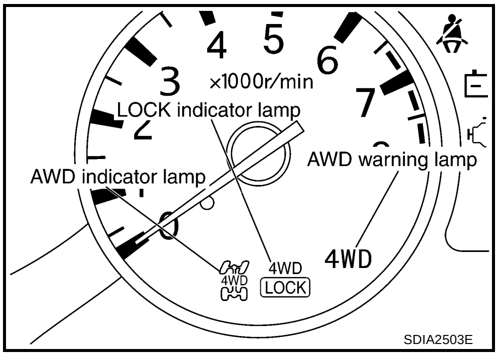

SDIA2503E

AWD WARNING LAMP

Turns ON when there is a malfunction in AWD system. It indicates that the vehicle is in fail-safe mode and changes to front-wheel drive or shifting driving force-AWD (Rear-wheels still have some driving torque).
Also turns ON when ignition switch is turned ON, for purpose of lamp check.
Turns OFF approximately for 1 second after the engine starts if system is normal.

AWD Warning Lamp Indication

Condition	AWD warning lamp
Lamp check	Turns ON when ignition switch is turned ON. Turns OFF approx. 1 seconds after engine start.
AWD system malfunction	ON
Protection function is activated due to heavy load to electric controlled coupling. (AWD system is not malfunctioning and AWD system changes to 2WD mode.)	Rapid flashing: 2 times/second (Flashing in approx. 1 minute and then turning OFF.)

Condition	AWD warning lamp
Large difference in diameter of front/rear tires	Slow flashing: 1 time/2 seconds (Continuing to flash until turning ignition switch OFF)
Other than above (system normal)	OFF

System Diagram

ADS00179

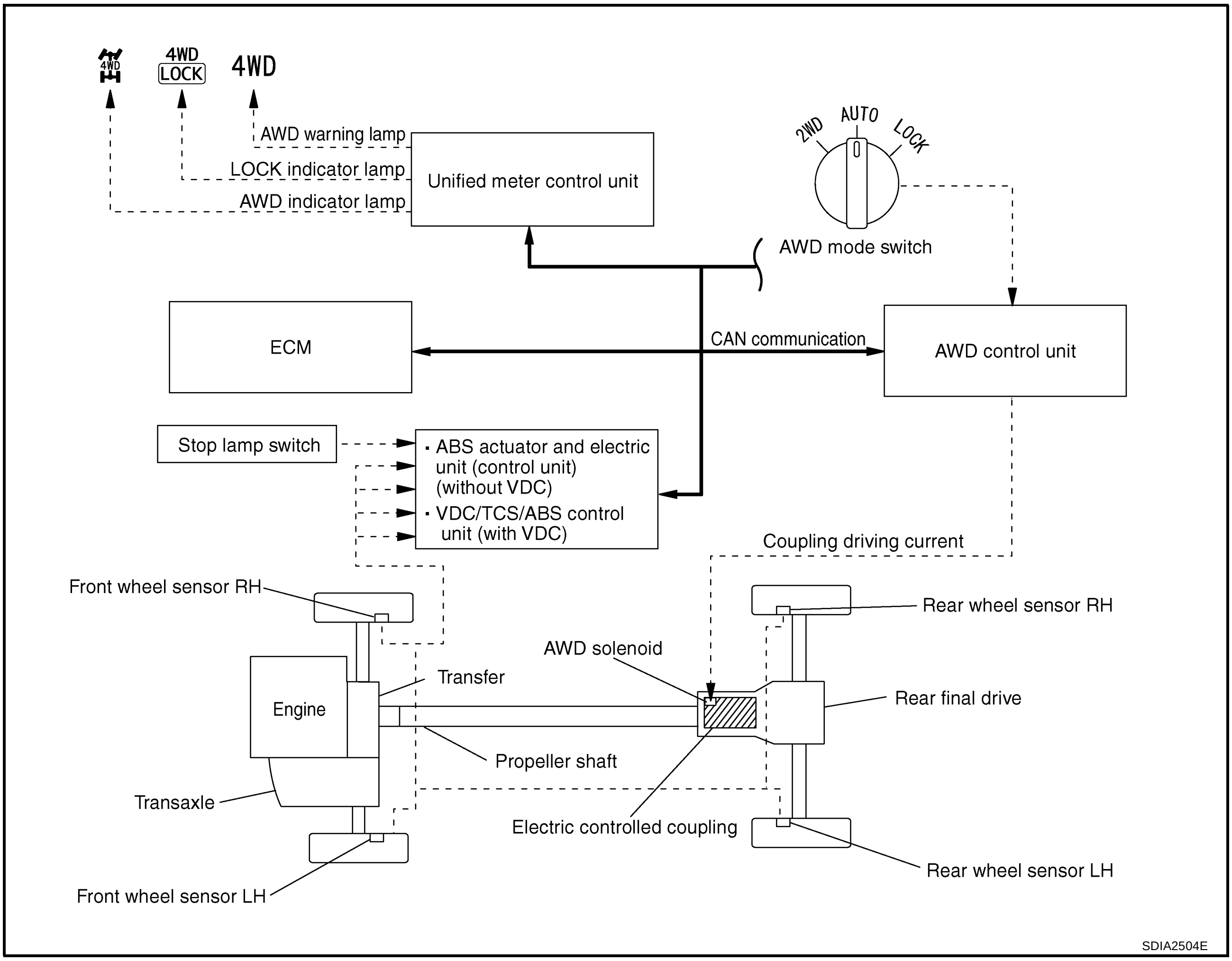

COMPONENTS FUNCTION DESCRIPTION

Component parts	Function
AWD control unit	● Controls driving force distribution by signals from each sensor and switches from front wheel driving mode (100:0) to AWD mode (50:50). ● 2WD mode is available by fail-safe function if malfunction is detected in electrical system.
Wheel sensors	Detects wheel speed.
AWD solenoid	Controls electric controlled coupling by operation signal from AWD control unit.
Electric controlled coupling	Transmits driving force to rear final drive.
AWD mode switch	Able to select from 2WD, AUTO or LOCK mode.
AWD warning lamp	● Illuminates if malfunction is detected in electrical system of AWD system. ● There is 1 blink in 2 seconds if rotation difference of front wheels and rear wheels is large. ● There are 2 blinks in 1 second if load is still applied to driving parts.
AWD indicator lamp	Indicates operation with optimal distribution of torque to front/rear wheels.
LOCK indicator lamp	Indicates that AWD system is under direct 4-wheel driving mode.
ABS actuator and electric unit (control unit) (without VDC) or VDC/TCS/ABS control unit (with VDC)	Transmits the following signals via CAN communication to AWD control unit. ● Vehicle speed signal ● Stop lamp switch signal (brake signal)
ECM	Transmits the following signals via CAN communication to AWD control unit. ● Accelerator pedal position signal ● Engine speed signal
Unified meter control unit	Transmits conditions of parking brake switch via CAN communication to AWD control unit.

CAN Communication

ADS0017A

SYSTEM DESCRIPTION

CAN (Controller Area Network) is a serial communication line for real time application. It is an on-vehicle multiplex communication line with high data communication speed and excellent error detection ability. Many electronic control units are equipped onto a vehicle, and each control unit shares information and links with other control units during operation (not independent). In CAN communication, control units are connected with 2 communication lines (CAN H line, CAN L line) allowing a high rate of information transmission with less wiring. Each control unit transmits/receives data but selectively reads required data only.

For details, refer to LAN-21, "CAN Communication Unit" .

TROUBLE DIAGNOSIS

PFP:00004

Fail-Safe Function

ADS0017B

- If any malfunction occurs in AWD electrical system, and control unit detects the malfunction, AWD warning lamp on combination meter turns ON to indicate system malfunction.
- When AWD warning lamp is ON, vehicle changes to front-wheel drive or shifting driving force-AWD (Rear-wheels still have some driving torque).

How to Perform Trouble Diagnosis

ADS0017C

BASIC CONCEPT

- To perform trouble diagnosis, it is the most important to have understanding about vehicle systems (control and mechanism) thoroughly.
- It is also important to clarify customer complaints before inspection.
  First of all, reproduce symptoms, and understand them fully.
  Ask customer about his/her complaints carefully. In some cases, it will be necessary to check symptoms by driving vehicle with customer.

  CAUTION:

  Customers are not professional. It is dangerous to make an easy guess like "maybe the customer means that...," or "maybe the customer mentions this symptom".

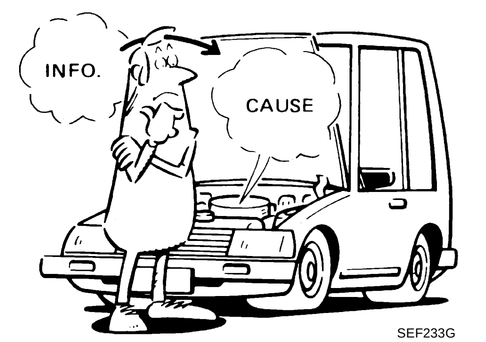

SEF233G

- It is essential to check symptoms right from the beginning in order to repair malfunctions completely.
  For intermittent malfunctions, reproduce symptoms based on interview with customer and past examples. Do not perform inspection on ad hoc basis. Most intermittent malfunctions are caused by poor contacts. In this case, it will be effective to shake suspected harness or connector by hand. When repairing without any symptom diagnosis, you cannot judge if malfunctions have actually been eliminated.
- After completing diagnosis, always erase diagnostic memory. Refer to TF-24, "How to Erase Self-Diagnosis Results" .
- For intermittent malfunctions, move harness or harness connector by hand. Then check for poor contact or reproduced open circuit.

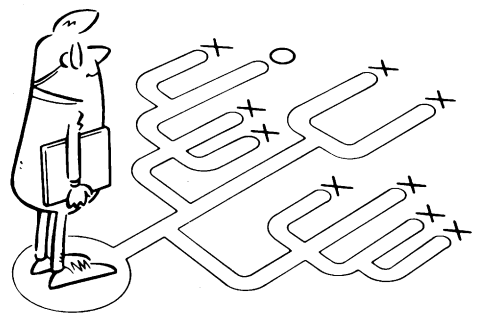
SEF234G

Location of Electrical Parts

ADS0017D

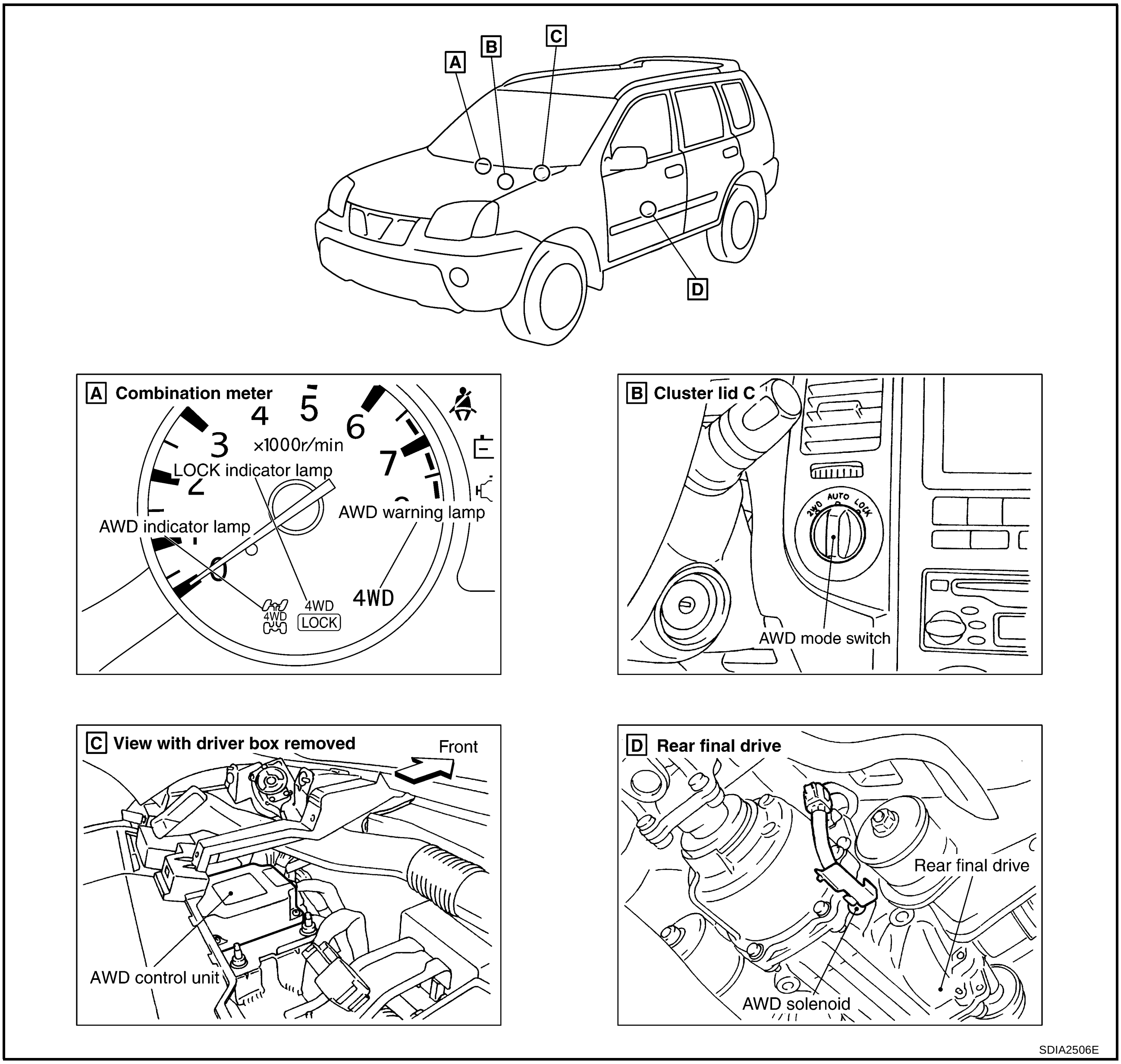

SDIA2506E

Circuit Diagram

ADS0017E

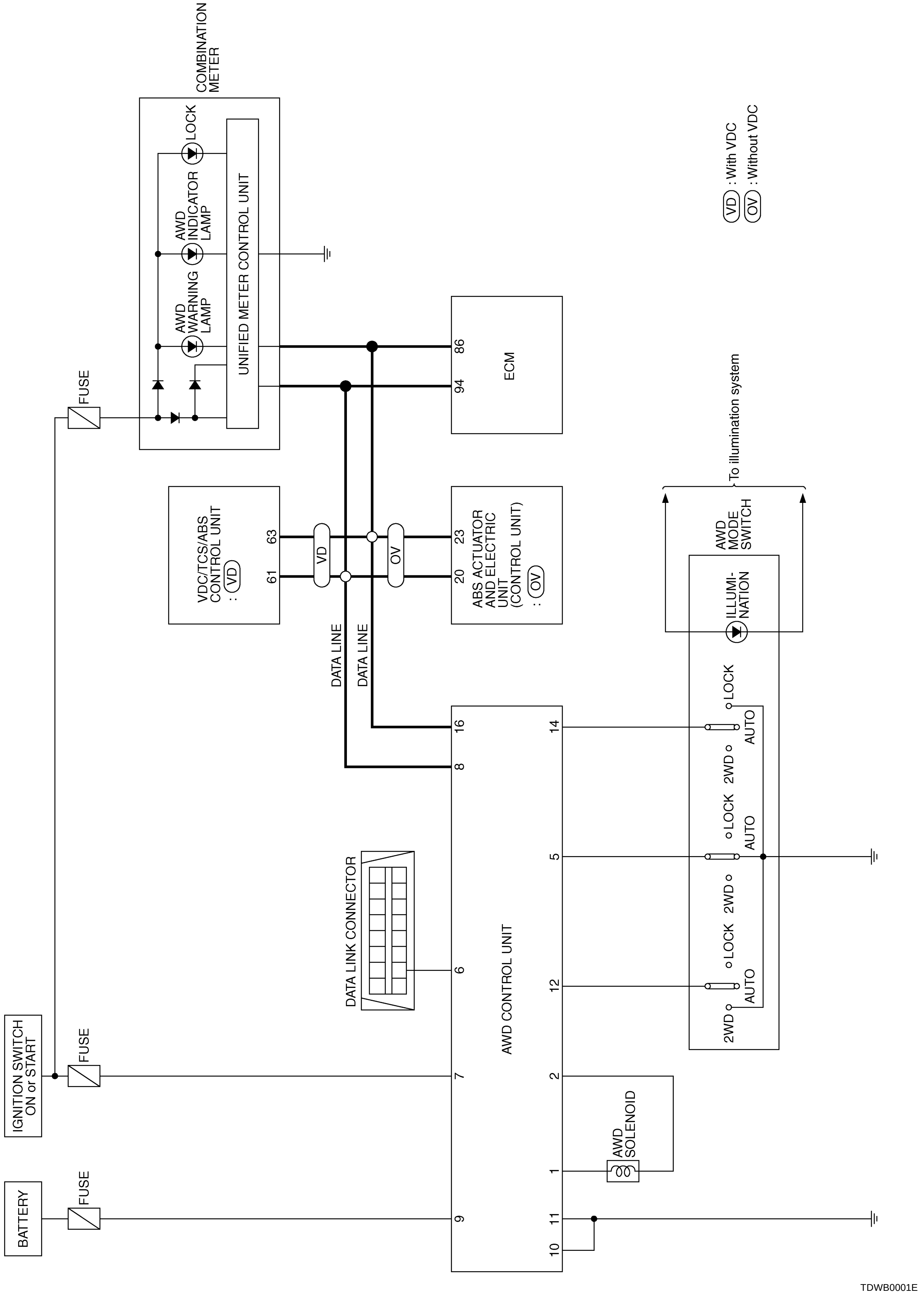

TDWB0001E

Wiring Diagram — AWD —

ADS0017F

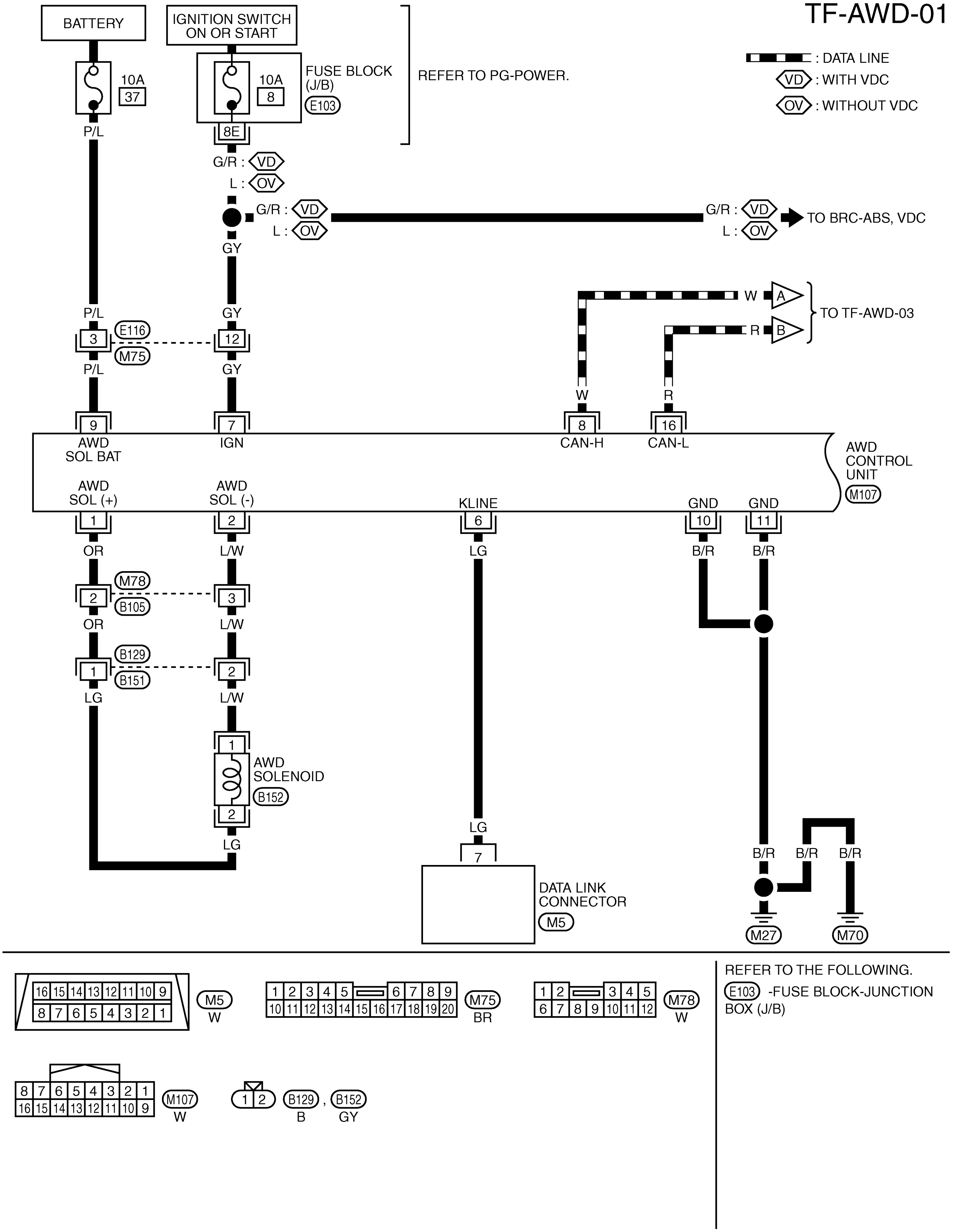

TDWB0002E

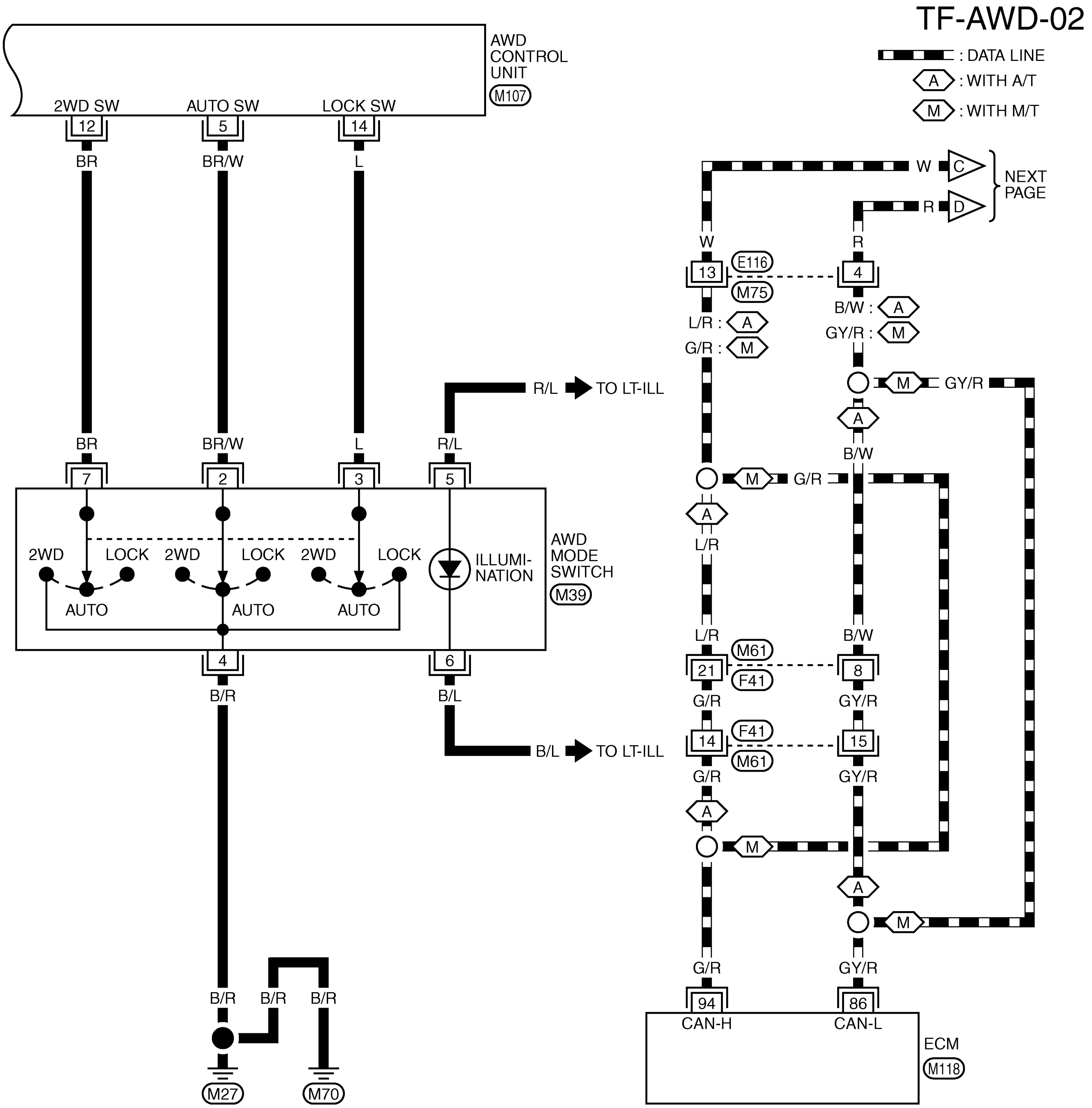

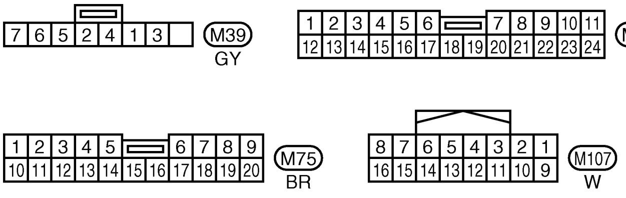

REFER TO THE FOLLOWING.
M118 -ELECTRICAL UNITS

TDWB0053E

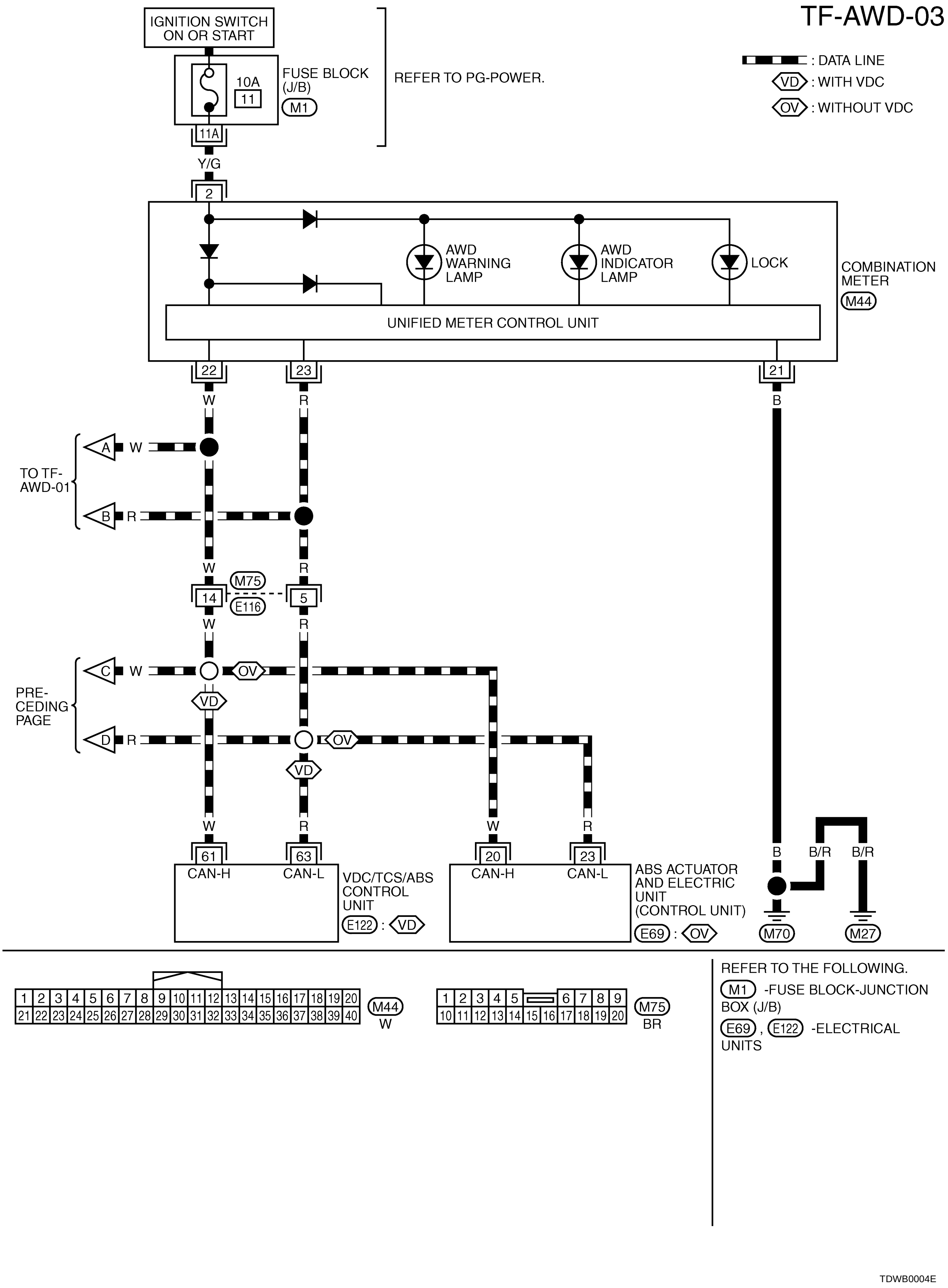
TF-AWD-03
: DATA LINE
VD : WITH VDC
OV : WITHOUT VDC
IGNITION SWITCH ON OR START
10A
11
FUSE BLOCK (J/B)
M1
REFER TO PG-POWER.
11A
Y/G
2
AWD WARNING LAMP
AWD INDICATOR LAMP
LOCK
COMBINATION METER
M44
UNIFIED METER CONTROL UNIT
22
23
21
W
R
B
A
B
TO TF-AWD-01
M75
E116
14
5
C
D
PRE-CEDING PAGE
OV
VD
61
63
CAN-H
CAN-L
VDC/TCS/ABS CONTROL UNIT
E122 : VD
20
23
ABS ACTUATOR AND ELECTRIC UNIT (CONTROL UNIT)
E69 : OV
B/R
M70
M27
M44
W
M75
BR
REFER TO THE FOLLOWING.
M1 -FUSE BLOCK-JUNCTION BOX (J/B)
E69 , E122 -ELECTRICAL UNITS
TDWB0004E

Trouble Diagnosis Chart for Symptoms

ADS0017G

If AWD warning lamp turns ON, perform self-diagnosis. Refer to TF-23, "SELF-DIAG RESULTS MODE" .

Symptom	Condition	Check item	Reference page
AWD indicator lamp and LOCK indicator lamp do not turn ON for approx. 1 second when ignition switch is turned to ON. (AWD indicator lamp and LOCK indicator lamp check)	Ignition switch: ON	CAN communication line	TF-37
		Power supply and ground for AWD control unit	
		Unified meter control unit	
AWD warning lamp does not turn ON when ignition switch is turned to ON. (AWD warning lamp check)	Ignition switch: ON	CAN communication line	TF-38
		Unified meter control unit	
AWD warning lamp does not turn OFF several seconds after engine started.	Engine running	CAN communication line	TF-39
		Power supply and ground for AWD control unit	
		Unified meter control unit	
		AWD solenoid	
		AWD actuator relay (integrated in AWD control unit)	
		Wheel sensor	
AWD mode cannot be switched after engine is started.	Engine running	AWD mode switch	TF-40
		CAN communication line	
		Unified meter control unit	
Heavy tight-corner braking symptom occurs when vehicle is driven in AUTO mode and steering wheel is turned fully to either side after engine is started. (See NOTE.)	● While driving ● AUTO mode ● Steering wheel is turned fully to either sides	CAN communication line	TF-41
		AWD mode switch	
		Accelerator pedal position signal	
		AWD solenoid	
		Mechanical malfunction of electric controlled coupling (clutch sticking etc.)	
Vehicle does not enter AWD mode even though AWD warning lamp turned to OFF.	Vehicle speed: 10 km/h (6 MPH) or less	AWD solenoid	TF-42
		Mechanical malfunction of electric controlled coupling (Mechanical engagement of clutch is not possible.)	
	Vehicle speed: 10 km/h (6 MPH) or more	Operating condition of parking brake	
		AWD solenoid	
		Mechanical malfunction of electric controlled coupling (Mechanical engagement of clutch is not possible.)	
While driving, AWD warning lamp flashes rapidly. (When flashing in approx. 1 minute and then turning OFF.) Rapid flashing: 2 times/second	● While driving ● AUTO mode and LOCK mode	Protection function is activated due to heavy load to electric controlled coupling. (AWD system is not malfunctioning.)	TF-43
While driving, AWD warning lamp flashes slowly. (When continuing to flash until turning ignition switch OFF) Slow flashing: 1 time/2 seconds	● While driving ● Vehicle speed: 20 km/h (12 MPH) or more	Tire size is different between front and rear of vehicle.	TF-43

NOTE:

- **Light tight-corner braking symptom may occur depending on driving conditions in AUTO mode. This is not malfunction.**
- **Heavy tight-corner braking symptom occurs when vehicle is driven in the following conditions: LOCK mode, steering wheel is turned fully to either side, and accelerator pedal was depressed.**

AWD Control Unit Input/Output Signal Reference Values

ADS0017H

AWD CONTROL UNIT INSPECTION TABLE

Specifications with CONSULT-II

Monitor item [Unit]	Content	Condition		Display value
FR RH SENSOR [km/h] or [mph]	Wheel speed (Front wheel right)	Vehicle stopped		0.00 km/h (0.00 mph)
		Vehicle running **CAUTION:** **Check air pressure of tire under standard condition.**		Approximately equal to the indication on speed-ometer (Inside of ±10%)
FR LH SENSOR [km/h] or [mph]	Wheel speed (Front wheel left)	Vehicle stopped		0.00 km/h (0.00 mph)
		Vehicle running **CAUTION:** **Check air pressure of tire under standard condition.**		Approximately equal to the indication on speed-ometer (Inside of ±10%)
RR RH SENSOR [km/h] or [mph]	Wheel speed (Rear wheel right)	Vehicle stopped		0.00 km/h (0.00 mph)
		Vehicle running **CAUTION:** **Check air pressure of tire under standard condition.**		Approximately equal to the indication on speed-ometer (Inside of ±10%)
RR LH SENSOR [km/h] or [mph]	Wheel speed (Rear wheel left)	Vehicle stopped		0.00 km/h (0.00 mph)
		Vehicle running **CAUTION:** **Check air pressure of tire under standard condition.**		Approximately equal to the indication on speed-ometer (Inside of ±10%)
BATTERY VOLT [V]	Power supply voltage for AWD control unit	Ignition switch: ON		Battery voltage
THRTL POS SEN [%]	Throttle opening condition	When depressing accelerator pedal (Value rises gradually in response to throttle position.)		0 - 100%
ETS SOLENOID [A]	Monitored value of current at AWD solenoid	Engine speed : At idle	2WD	Approx. 0.000A
			AUTO	Approx. 0.000A
			LOCK	Approx. 0.000A
		Engine speed : 3,000 rpm or more con-stant	2WD	Approx. 0.000A
			AUTO	Approx. 0.000 - 1.500A*
			LOCK	Approx. 2.800A
STOP LAMP SW [ON/OFF]	Condition of brake pedal operation	Brake pedal: Depressed		ON
		Brake pedal: Released		OFF
ENG SPEED SIG [RUN/STOP]	Condition of engine running	Engine stopped (Engine speed: Less than 400 rpm)		STOP
		Engine running (Engine speed: 400 rpm or more)		RUN
ETS ACTUATOR [ON/OFF]	Operating condition of AWD actuator relay (integrated in AWD control unit)	Engine stopped (Ignition switch: ON)		OFF
		Engine running		ON
4WD WARN LAMP [ON/OFF]	AWD warning lamp condition	AWD warning lamp: ON		ON
		AWD warning lamp: OFF		OFF
4WD MODE SW [2WD/AUTO/LOCK]	Input condition from AWD mode switch	AWD mode switch	2WD	2WD
			AUTO	AUTO
			LOCK	LOCK

Monitor item [Unit]	Content	Condition		Display value
4WD MODE MON [2WD/AUTO/ LOCK]	Control status of AWD (Output condition of AWD indicator lamp and LOCK indicator lamp signal)	AWD mode switch (Engine running)	2WD	2WD
			AUTO	AUTO
			LOCK	LOCK
DIS-TIRE MONI [mm]	Improper size tire installed condition	Vehicle running with normal size tire installed		0-4 mm
		Vehicle running with improper size tire installed (Front/rear tire size difference, wear condition)		4-8 mm, 8- mm
P BRAKE SW [ON/OFF]	Condition of parking brake	Parking brake operated		ON
		Parking brake not operated		OFF

*: The values are changed by throttle opening and engine speed.

CONSULT-II Function (ALL MODE AWD/4WD)

ADS0017I

FUNCTION

CONSULT-II can display each diagnostic item using the diagnostic test modes shown following.

Diagnostic test mode	Function	Reference page
Self-diagnosis results	● Self-diagnosis results can be read and erased quickly.	TF-23
Data monitor	● Input/Output data in the AWD control unit can be read.	TF-24
CAN diagnostic support monitor	● The results of transmit/receive diagnosis of CAN communication can be read.	LAN-13
Active test	● Diagnostic Test Mode in which CONSULT-II drives some actuators apart from the AWD control unit and also shifts some parameters in a specified range.	TF-25
ECU part number	● AWD control unit part number can be read.	TF-25

CONSULT-II SETTING PROCEDURE

- For details, refer to the separate “CONSULT-II Operations Manual”.

1. Turn ignition switch “OFF”.
2. Connect CONSULT-II and CONSULT-II CONVERTER to data link connector on vehicle.
3. Turn ignition switch “ON”.

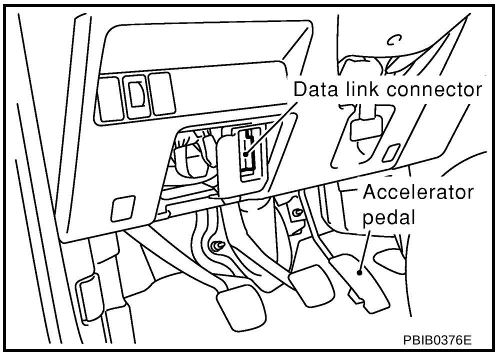

PBIB0376E

4. Touch “START (NISSAN BASED VHCL)”.

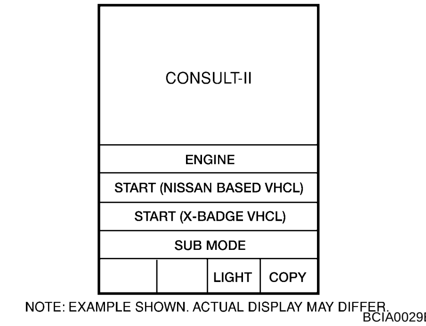

BCIA0029E

5. Touch “ALL MODE AWD/4WD”.
   If “ALL MODE AWD/4WD” is not indicated, go to GI-38, "CONSULT-II Data Link Connector (DLC) Circuit" .
6. Perform each diagnostic test mode according to each service procedure.

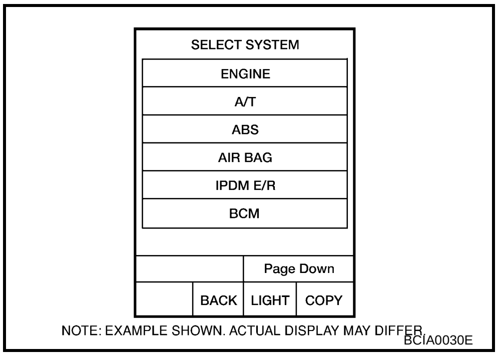

SELF-DIAG RESULTS MODE

Operation Procedure

1. Perform “CONSULT-II SETTING PROCEDURE”. Refer to TF-22, "CONSULT-II SETTING PROCEDURE" .
2. Start engine and drive at 30 km/h (19 MPH) or more for approx. 1 minute.
3. Stop vehicle. With engine at idle, touch “SELF-DIAG RESULTS”. Display shows malfunction experienced since the last erasing operation.

   NOTE:
   - **The details for “TIME” are as follow:**
     - **“0”: Error currently detected with AWD control unit.**
     - **Except for “0”: Error detected in the past and memorized with AWD control unit.** Detects frequency of driving after DTC occurs (frequency of turning ignition switch “ON/OFF”).

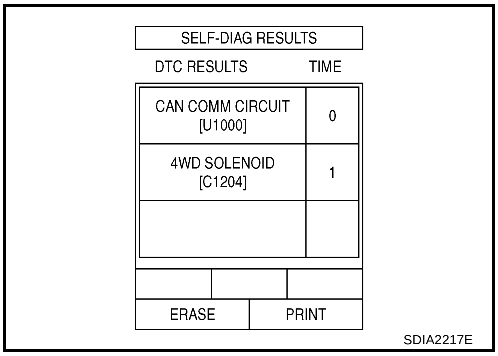

Display Item List

Items (CONSULT-II screen terms)	Diagnostic item is detected when...	Check item
CONTROLLER FAILURE [C1201]	Malfunction has occurred inside AWD control unit.	TF-27, "AWD Control Unit"
ABS SYSTEM [C1203]	Malfunction related to wheel sensor has been detected by ABS actuator and electric unit (control unit) (without VDC) or VDC/TCS/ABS control unit (with VDC).	TF-28, "ABS System"
4WD SOLENOID [C1204]	Malfunction related to AWD solenoid has been detected.	TF-28, "AWD Solenoid"
4WD ACTUATOR RLY [C1205]	Malfunction has been detected from AWD actuator relay integrated with AWD control unit, or malfunction related to AWD solenoid has been detected.	TF-32, "AWD Actuator Relay" or TF-28, "AWD Solenoid"
MODE SW [C1209]	More than two switch inputs are simultaneously detected due to short circuit of AWD mode switch.	TF-33, "AWD Mode Switch"
ENGINE SIGNAL 1 [C1210]	Malfunction has been detected from ECM.	TF-35, "Engine Control Signal"
CAN COMM CIRCUIT [U1000]	Malfunction has been detected from CAN communication line.	TF-36, "CAN Communication Line"
NO DTC IS DETECTED. FURTHER TESTING MAY BE REQUIRED.	No NG item has been detected.	—

CAUTION:
- **If “CAN COMM CIRCUIT [U1000]” is displayed with other DTCs, first perform the trouble diagnosis for CAN communication line.**
- **Make sure that ABS warning lamp turns OFF by driving for a minute at vehicle speed of 30 km/h (19 MPH) or more after turning ignition switch "OFF" if AWD warning lamp turns ON with system malfunction of “ABS SYSTEM [C1203]”. AWD warning lamp may not turn OFF if it is normal unless ignition switch turns OFF at once and engine restarts after that.**

How to Erase Self-Diagnosis Results

1. Perform applicable inspection of malfunctioning item and then repair or replace.
2. Start engine and drive at 30 km/h (19 MPH) or more for approx. 1 minute.
3. Make sure that ABS warning lamp turns OFF.
   NOTE:
   Make sure that ABS warning lamp turns OFF by driving for a minute at vehicle speed of 30 km/h (19 MPH) or more after turning ignition switch "OFF" if AWD warning lamp turns ON with system malfunction of “ABS SYSTEM [C1203]”. AWD warning lamp may not turn OFF if it is normal unless ignition switch turns OFF at once and engine restarts after that.
4. Turn ignition switch “OFF” to erase memory.
5. Start engine and select “SELF-DIAG RESULTS” mode for “ALL MODE AWD/4WD” with CONSULT-II.
6. Touch “ERASE” on CONSULT-II screen to erase DTC memory.
   CAUTION:
   If memory cannot be erased, perform applicably diagnosis.
7. Drive at 30 km/h (19 MPH) or more for approx. 1 minute. Be sure AWD warning lamp is OFF.

DATA MONITOR MODE

Operation Procedure

1. Perform “CONSULT-II SETTING PROCEDURE”. Refer to TF-22, "CONSULT-II SETTING PROCEDURE"
   .
2. Touch “DATA MONITOR”.
3. Select from “SELECT MONITOR ITEM”, screen of data monitor mode is displayed.
   NOTE:
   When malfunction is detected, CONSULT-II performs REAL-TIME DIAGNOSIS.
   Also, any malfunction detected while in this mode will be displayed at real time.

Display Item List

×: Standard –: Not applicable

Monitor item (Unit)	SELECT MONITOR ITEM			Remarks
	ECU INPUT SIGNALS	MAIN SIGNALS	SELECTION FROM MENU	
FR RH SENSOR [km/h] or [mph]	×	×	×	Wheel speed calculated by front wheel sensor RH signal is displayed.
FR LH SENSOR [km/h] or [mph]	×	×	×	Wheel speed calculated by front wheel sensor LH signal is displayed.
RR RH SENSOR [km/h] or [mph]	×	×	×	Wheel speed calculated by rear wheel sensor RH signal is displayed.
RR LH SENSOR [km/h] or [mph]	×	×	×	Wheel speed calculated by rear wheel sensor LH signal is displayed.
BATTERY VOLT [V]	–	–	×	Power supply voltage for AWD control unit.
THRTL POS SEN [%]	–	–	×	Throttle opening status is displayed.
ETS SOLENOID [A]	–	–	×	Monitored value of current at AWD solenoid.
STOP LAMP SW [ON/OFF]	–	–	×	Stop lamp switch signal status via CAN communication line is displayed.
ENG SPEED SIG [RUN/STOP]	–	–	×	Engine status is displayed.
ETS ACTUATOR [ON/OFF]	–	–	×	Operating condition of AWD actuator relay (integrated in AWD control unit) is displayed.
4WD WARN LAMP [ON/OFF]	–	–	×	Control status of AWD warning lamp is displayed.
4WD MODE SW [2WD/AUTO/LOCK]	–	–	×	AWD mode switch signal status via CAN communication line is displayed.

Monitor item (Unit)	SELECT MONITOR ITEM			Remarks
	ECU INPUT SIGNALS	MAIN SIGNALS	SELECTION FROM MENU	
4WD MODE MON [2WD/AUTO/LOCK]	–	–	×	Control status of AWD is displayed. (Output condition of AWD indicator lamp and LOCK indicator lamp signal)
DIS-TIRE MONI [mm]	–	–	×	Improper size tire installed condition is displayed.
P BRAKE SW [ON/OFF]	–	–	×	Parking switch signal status via CAN communication line is displayed.
Voltage [V]	–	–	×	The value measured by the voltage probe is displayed.
Frequency [Hz]	–	–	×	The value measured by the pulse probe is displayed.
DUTY-HI (high) [%]	–	–	×	
DUTY-LOW (low) [%]	–	–	×	
PLS WIDTH-HI [msec]	–	–	×	
PLS WIDTH-LOW [msec]	–	–	×	

ACTIVE TEST MODE

Description

Use this mode to determine and identify the details of a malfunction based on self-diagnosis results or data monitor. AWD control unit gives drive signal to actuator with receiving command from CONSULT-II to check operation of actuator.

Test Item

Test item	Condition	Description
ETS S/V (Detects AWD solenoid)	● Vehicle stopped ● Engine running ● No DTC detected	● Change command current value to AWD solenoid, and then change driving mode. (Monitor value is normal if it is within approximately ±10% of command value.) Qu: Increase current value in increments of 0.20A Qd: Decrease current value in increments of 0.20A UP: Increase current value in increments of 0.02A DOWN: Decrease current value in increments of 0.02A

CAUTION:

Do not continuously energize for a long time.

AWD CONTROL UNIT PART NUMBER

Ignore the AWD control unit part number displayed in the “ECU PART NUMBER”.
Refer to parts catalog to order the AWD control unit.

A B C TF E F G H I J K L M

TROUBLE DIAGNOSIS FOR SYSTEM

PFP:00000

Power Supply Circuit for AWD Control Unit

ADS0017J

CONSULT-II REFERENCE VALUE IN DATA MONITOR MODE

Data are reference value.

Monitor item [Unit]	Condition	Display value (Approx.)
BATTERY VOLT [V]	Ignition switch: ON	Battery voltage

DIAGNOSTIC PROCEDURE

1. CHECK POWER SUPPLY

1. Turn ignition switch “OFF”.
2. Disconnect AWD control unit harness connector.
3. Turn ignition switch “ON”. (Do not start engine.)
4. Check voltage between AWD control unit harness connector terminals and ground.

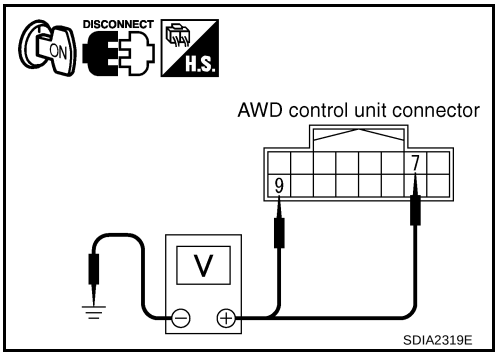

SDIA2319E

Connector	Terminal	Voltage (Approx.)
M107	7 - Ground	Battery voltage
	9 - Ground	

5. Turn ignition switch “OFF”.
6. Check voltage between AWD control unit harness connector terminals and ground.

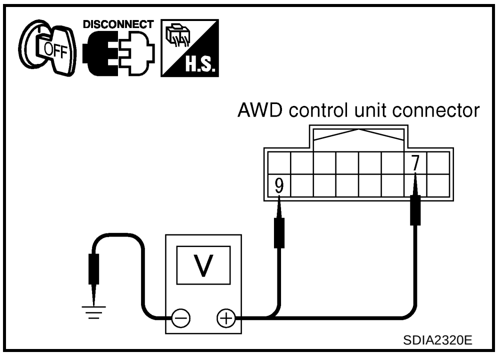

SDIA2320E

Connector	Terminal	Voltage (Approx.)
M107	7 - Ground	0V
	9 - Ground	Battery voltage

OK or NG

OK >> GO TO 2.

NG >> Check the following. If any item is damaged, repair or replace damaged parts.

- 10A fuse [No. 8, located in the fuse block (J/B) or No. 37, located in the fuse and fusible link box]
- Harness for short or open between battery and AWD control unit harness connector terminal 9
- Harness for short or open between ignition switch and AWD control unit harness connector terminal 7
- Ignition switch. Refer to PG-2, "POWER SUPPLY ROUTING" .

A
B
C
TF
E
F
G
H
I
J
K
L
M

2. CHECK GROUND CIRCUIT

1. Turn ignition switch “OFF”.
2. Disconnect AWD control unit harness connector.
3. Check continuity between AWD control unit harness connector M107 terminals 10, 11and ground.

Continuity should exist.

Also check harness for short to ground and short to power.

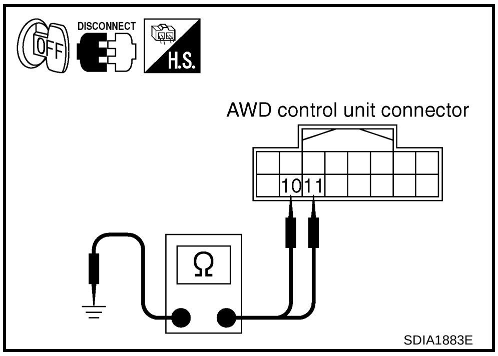

OK or NG

OK >> GO TO 3.
NG >> Repair open circuit or short to ground or short to power in harness or connectors.

3. CHECK DTC

Start engine.

Does AWD warning lamp turn OFF?

YES >> **INSPECTION END**
NO >> Perform the self-diagnosis, repair or replace damaged parts. Refer to TF-23, "SELF-DIAG RESULTS MODE" .

AWD Control Unit

ADS0017K

DIAGNOSTIC PROCEDURE

- Check the following if “CONTROLLER FAILURE [C1201]” is displayed in self-diagnosis results of CONSULT-II.

1. PERFORM SELF-DIAGNOSIS

With CONSULT-II

1. Turn ignition switch “ON”. (Do not start engine.)
2. Select “SELF-DIAG RESULTS” mode for “ALL MODE AWD/4WD” with CONSULT-II.
3. Touch “ERASE”.
4. Turn ignition switch “OFF” and wait at least 10 seconds.
5. Perform the self-diagnosis again.

Is “CONTROLLER FAILURE [C1201]” displayed?

YES >> Replace AWD control unit. Refer to TF-45, "AWD CONTROL UNIT" .
NO >> **INSPECTION END**

ABS System

ADS0017L

DIAGNOSTIC PROCEDURE

- Check the following if “ABS SYSTEM [C1203]” is displayed in self-diagnosis results of CONSULT-II.

1. CHECK DTC WITH ABS ACTUATOR AND ELECTRIC UNIT (CONTROL UNIT) OR VDC/TCS/ABS/ CONTROL UNIT

Perform self-diagnosis with ABS actuator and electric unit (control unit) (without VDC) or VDC/TCS/ABS control unit (with VDC). Refer to BRC-18, "Self-Diagnosis" (without VDC) or BRC-61, "Self-Diagnosis" (with VDC).

Is any malfunction detected by self-diagnosis?

YES >> Check the malfunctioning system.
NO >> GO TO 2.

2. CHECK DTC AFTER DRIVING

1. Turn ignition switch “OFF”.
2. Start engine and drive vehicle at 30 km/h (19 MPH) for at least 1 minute.
3. Make sure that ABS warning lamp turns OFF.
4. Perform erase self-diagnosis results. Refer to TF-24, "How to Erase Self-Diagnosis Results" .
5. Stop vehicle and turn ignition switch “OFF”.
6. Turn ignition switch “ON”.
7. Perform self-diagnosis.

Is “ABS SYSTEM [C1203]” displayed?

YES >> GO TO 3.
NO >> **INSPECTION END**

3. CHECK AWD CONTROL UNIT

Check AWD control unit input/output signal. Refer to TF-21, "AWD Control Unit Input/Output Signal Reference Values" .

OK or NG

OK >> GO TO 4.
NG >> Check AWD control unit pin terminals for damage or loose connection with harness connector. If any item is damaged, repair or replace damaged parts.

4. CHECK DTC

Perform the self-diagnosis, after driving a vehicle for a while.

OK or NG

OK >> **INSPECTION END**
NG >> Perform self-diagnosis with ABS actuator and electric unit (control unit) (without VDC) or VDC/TCS/ABS control unit (with VDC) again. Refer to BRC-18, "Self-Diagnosis" (without VDC) or BRC-61, "Self-Diagnosis" (with VDC).

AWD Solenoid

ADS0017M

CONSULT-II REFERENCE VALUE IN DATA MONITOR MODE

Data are reference value.

Monitor item [Unit]	Condition		Display value
ETS SOLENOID [A]	Engine speed: At idle	2WD mode	Approx. 0.000A
		AUTO mode	
		LOCK mode	
	Engine speed: 3,000 rpm or more constant	2WD mode	Approx. 0.000A
		AUTO mode	Approx. 0.000 - 1.500A*
		LOCK mode	Approx. 2.800A

*: The values are changed by throttle opening and engine speed.

DIAGNOSTIC PROCEDURE

- Check the following if “4WD SOLENOID [C1204]” is displayed in self-diagnosis results of CONSULT-II.

1. CHECK AWD SOLENOID SIGNAL

With CONSULT-II

1. Start engine.
2. Select “DATA MONITOR” mode for “ALL MODE AWD/4WD” with CONSULT-II.
3. Read out the value of “ETS SOLENOID”.

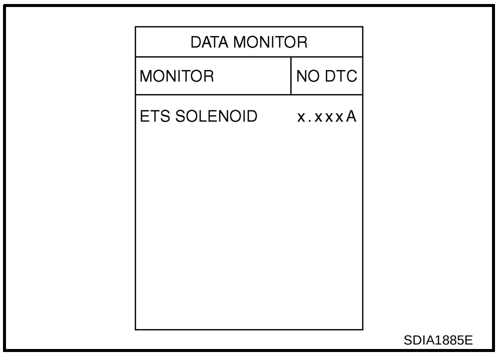

Condition		Display value
Engine speed: At idle	2WD mode	Approx. 0.000A
	AUTO mode	
	LOCK mode	
Engine speed: 3,000 rpm or more constant	2WD mode	Approx. 0.000A
	AUTO mode	Approx. 0.000 - 1.500A*
	LOCK mode	Approx. 2.800A

*: The values are changed by throttle opening and engine speed.

OK or NG

OK >> GO TO 6.
NG >> GO TO 2.

2. CHECK AWD SOLENOID

1. Turn ignition switch “OFF”.
2. Disconnect AWD solenoid harness connector.
3. Check resistance between AWD solenoid harness connector B152 terminals 1 and 2.

1 - 2: Approx. 2.45Ω

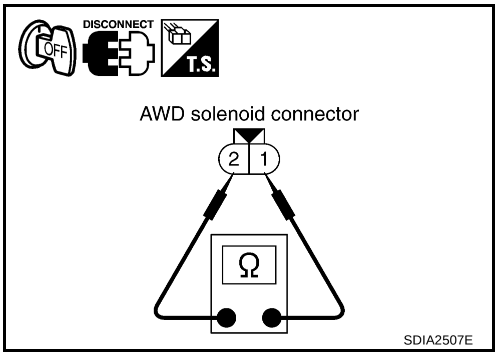

OK or NG

OK >> GO TO 3.
NG >> AWD solenoid is malfunctioning. Replace electric controlled coupling. Refer to RFD-16, "Disassembly and Assembly" .

3. CHECK POWER SUPPLY

1. Turn ignition switch “OFF”.
2. Disconnect AWD control unit harness connector.
3. Turn ignition switch “ON”. (Do not start engine.)
4. Check voltage between AWD control unit harness connector terminal 9 and ground.

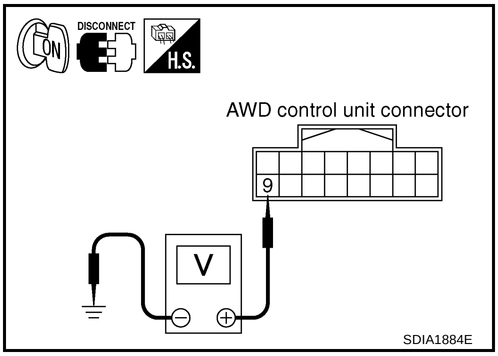

SDIA1884E

Connector	Terminal	Voltage (Approx.)
M107	9 - Ground	Battery voltage

OK or NG

OK >> GO TO 4.
NG >> Check the following. If any item is damaged, repair or replace damaged parts.
- 10A fuse (No. 37, located in the fuse and fusible link box)
- Harness for short or open between battery and AWD control unit harness connector terminal 9

4. CHECK AWD SOLENOID CIRCUIT

1. Turn ignition switch “OFF”.
2. Disconnect AWD control unit harness connector.
3. Check resistance between AWD control unit harness connector terminals 1 and 2.

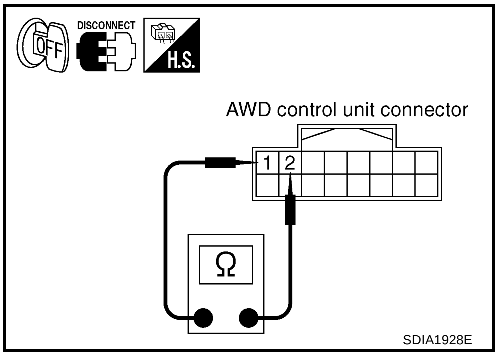

SDIA1928E

Connector	Terminal	Resistance (Approx.)
M107	1 - 2 (Ground)	2.45 Ω

OK or NG

OK >> GO TO 6.
NG >> GO TO 5.

5. CHECK HARNESS BETWEEN AWD CONTROL UNIT AND AWD SOLENOID

1. Turn ignition switch “OFF”.
2. Disconnect AWD control unit harness connector and AWD solenoid harness connector.
3. Check continuity between the following terminals.

– AWD control unit harness connector M107 terminal 1 and AWD solenoid harness connector B152 terminal 2.
– AWD control unit harness connector M107 terminal 2 and AWD solenoid harness connector B152 terminal 1.

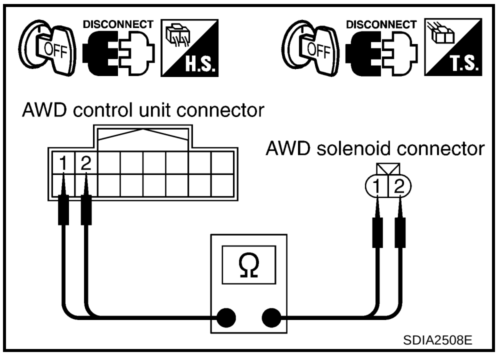

SDIA2508E

1 - 2 : Continuity should exist.
2 - 1 : Continuity should exist.

Also check harness for short to ground and short to power.

OK or NG

OK >> GO TO 6.
NG >> Repair or replace damaged parts.

6. CHECK AWD CONTROL UNIT

Check AWD control unit input/output signal. Refer to TF-21, "AWD Control Unit Input/Output Signal Reference Values" .

OK or NG

OK >> GO TO 7.
NG >> Check AWD control unit pin terminals for damage or loose connection with harness connector. If any item is damaged, repair or replace damaged parts.

7. CHECK DTC

Perform the self-diagnosis, after driving a vehicle for a while.

OK or NG

OK >> **INSPECTION END**
NG >> Replace AWD control unit.

COMPONENT INSPECTION

1. Turn ignition switch “OFF”.
2. Disconnect AWD solenoid harness connector.
3. Check resistance between AWD solenoid harness connector B152 terminals 1 and 2.

   1 - 2 : Approx. 2.45 Ω

4. If NG, replace the electric controlled coupling. Refer to RFD-16, "Disassembly and Assembly" .

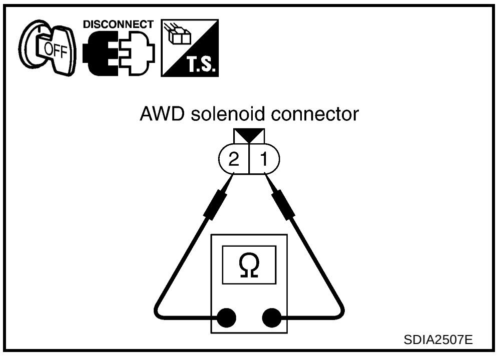

AWD Actuator Relay

ADS0017N

CONSULT-II REFERENCE VALUE IN DATA MONITOR MODE

Data are reference value.

Monitor item	Condition	Display value
ETS ACTUATOR [ON/OFF]	Engine stopped (Ignition switch: ON)	OFF
	Engine running	ON

DIAGNOSTIC PROCEDURE

- Check the following if “4WD ACTUATOR RLY [C1205]” is displayed in self-diagnosis results of CONSULT-II.

1. CHECK AWD SOLENOID SYSTEM

Perform self-diagnosis. Refer to TF-23, "SELF-DIAG RESULTS MODE" .

Is “4WD SOLENOID [C1204]” displayed?

YES >> Perform trouble diagnosis for AWD solenoid. Refer to TF-28, "AWD Solenoid" .
NO >> GO TO 2.

2. CHECK AWD ACTUATOR RELAY SIGNAL

With CONSULT-II

1. Turn ignition switch “ON”. (Do not start engine.)
2. Select “DATA MONITOR” mode for “ALL MODE AWD/4WD” with CONSULT-II.
3. Start engine and read out ON/OFF signaling action of “ETS ACTUATOR”.

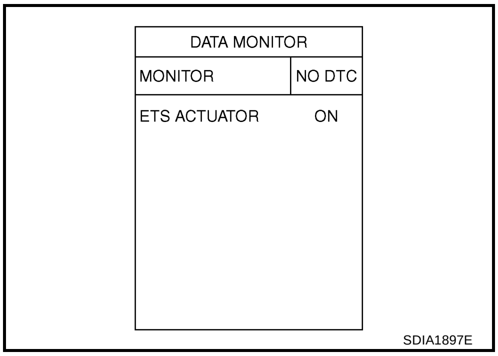

Monitor item	Condition	Display value
ETS ACTUATOR	Engine stopped (Ignition switch: ON)	OFF
	Engine running	ON

OK or NG

OK >> GO TO 4.
NG >> GO TO 3.

3. CHECK AWD CONTROL UNIT

Check AWD control unit input/output signal. Refer to TF-21, "AWD Control Unit Input/Output Signal Reference Values" .

OK or NG

OK >> GO TO 4.
NG >> Check AWD control unit pin terminals for damage or loose connection with harness connector. If any item is damaged, repair or replace damaged parts.

4. CHECK DTC

Perform the self-diagnosis, after driving a vehicle for a while.

OK or NG

OK >> **INSPECTION END**
NG >> Replace AWD control unit.

AWD Mode Switch

ADS00187

CONSULT-II REFERENCE VALUE IN DATA MONITOR MODE

Data are reference value.

Monitor item	Condition		Display value
4WD MODE SW [2WD/AUTO/LOCK]	AWD mode switch	2WD	2WD
		AUTO	AUTO
		LOCK	LOCK

DIAGNOSTIC PROCEDURE

- Check the following if “MODE SW [C1209]” is detected in self-diagnosis results of CONSULT-II.

1. CHECK AWD MODE SWITCH SIGNAL

With CONSULT-II

1. Turn ignition switch “ON”. (Do not start engine.)
2. Select “DATA MONITOR” mode for “ALL MODE AWD/4WD” with CONSULT-II.
3. Read out monitor “4WD MODE SW” with operating AWD mode switch.

Monitor item	Condition		Display value
4WD MODE SW	AWD mode switch	2WD	2WD
		AUTO	AUTO
		LOCK	LOCK

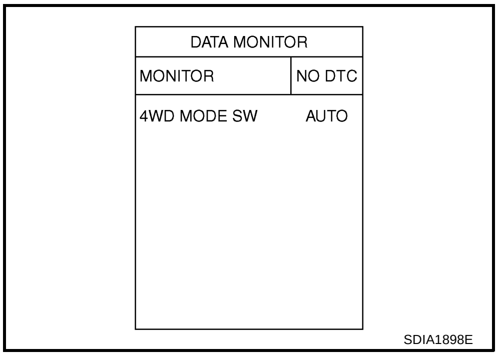

SDIA1898E

OK or NG

OK >> GO TO 5.
NG >> GO TO 2.

2. CHECK AWD MODE SWITCH

1. Turn ignition switch “OFF”.
2. Disconnect AWD mode switch harness connector.
3. Operate AWD mode switch and check continuity between AWD mode switch harness connector terminals.

Connector	Terminal	Condition	Continuity
M39	2 - 4	AWD mode switch: AUTO	Yes
		Except the above	No
	3 - 4	AWD mode switch: LOCK	Yes
		Except the above	No
	4 - 7	AWD mode switch: 2WD	Yes
		Except the above	No

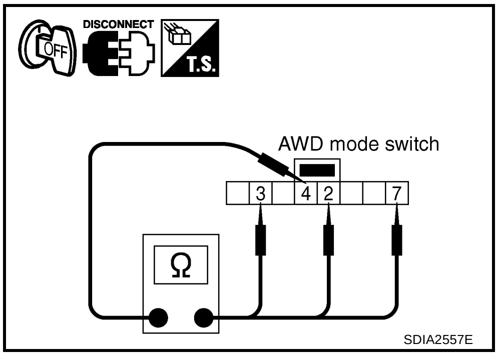

SDIA2557E

OK or NG

OK >> GO TO 3.
NG >> Replace AWD mode switch.

3. CHECK AWD MODE SWITCH POWER SUPPLY CIRCUIT

1. Turn ignition switch “OFF”.
2. Disconnect AWD mode switch harness connector.
3. Turn ignition switch “ON”. (Do not start engine.)
4. Check voltage between AWD mode switch harness connector terminals and ground.

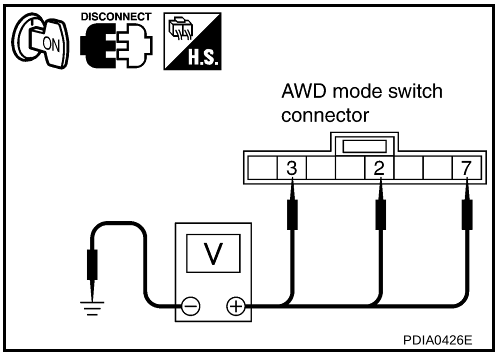

Connector	Terminal	Voltage (Approx.)
M39	2 - Ground	Battery voltage
	3 - Ground	
	7 - Ground	

5. Turn ignition switch “OFF”.
6. Check voltage between AWD mode switch harness connector terminals and ground.

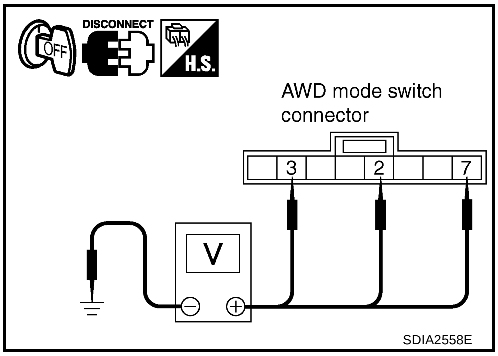

Connector	Terminal	Voltage (Approx.)
M39	2- Ground	0V
	3 - Ground	
	7- Ground	

OK or NG

OK >> GO TO 4.
NG >> Check harness for short or open between AWD mode switch harness connector terminals and AWD control unit harness connector terminals. If any item is damaged, repair or replace damaged parts.

4. CHECK AWD MODE SWITCH GROUND CIRCUIT

1. Turn ignition switch “OFF”.
2. Disconnect AWD mode switch harness connector.
3. Check continuity between AWD mode switch harness connector M39 terminal 4 and ground.

Continuity should exist.

Also check harness for short to ground and short to power.

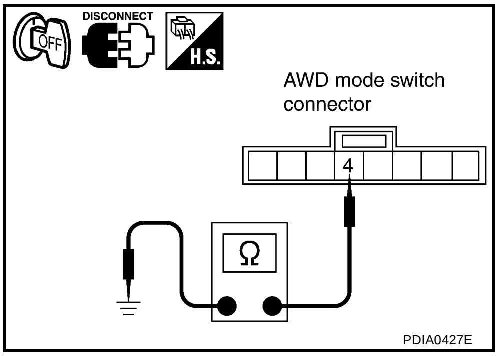

OK or NG

OK >> GO TO 5.
NG >> Repair open circuit or short to ground or short to power in harness or connectors.

5. CHECK AWD CONTROL UNIT

Check AWD control unit input/output signal. Refer to TF-21, "AWD Control Unit Input/Output Signal Reference Values" .

OK or NG

OK >> GO TO 6.
NG >> Check AWD control unit pin terminals for damage or loose connection with harness connector. If any item is damaged, repair or replace damaged parts.

6. CHECK AWD INDICATOR LAMP AND LOCK INDICATOR LAMP

1. Turn ignition switch “OFF”.
2. Check AWD indicator lamp and LOCK indicator lamp “ON” for approx. 1 second when the ignition switch is turned “ON”.

Do AWD indicator lamp and LOCK indicator lamp “ON” for approx. 1 second?

YES >> **INSPECTION END**
NO >> Go to TF-37, "AWD Indicator Lamp and LOCK Indicator Lamp Do Not Turn ON for Approx. 1 Second When Ignition Switch Is Turned to ON" .

COMPONENT INSPECTION

1. Turn ignition switch “OFF”.
2. Disconnect AWD mode switch harness connector.
3. Operate AWD mode switch and check continuity between AWD mode switch harness connector terminals.

Connector	Terminal	Condition	Continuity
M39	2 - 4	AWD mode switch: AUTO	Yes
		Except the above	No
	3 - 4	AWD mode switch: LOCK	Yes
		Except the above	No
	4 - 7	AWD mode switch: 2WD	Yes
		Except the above	No

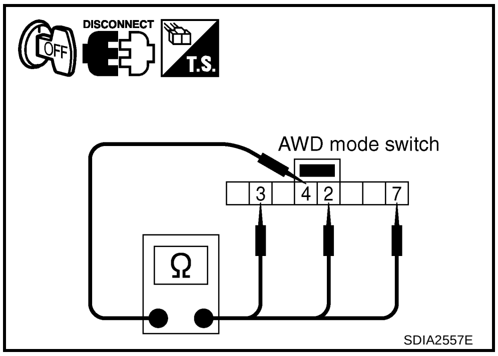

4. If NG, replace AWD mode switch.

Engine Control Signal

ADS00186

DIAGNOSTIC PROCEDURE

- Check the following if “ENGINE SIGNAL 1 [C1210]” is displayed in self-diagnosis results of CONSULT-II.

1. CHECK DTC WITH ECM

Perform self-diagnosis with ECM. Refer to EC-48, "Emission-Related Diagnostic Information" .

Is any malfunction detected by self-diagnosis?

YES >> Check the malfunctioning system.
NO >> GO TO 2.

2. CHECK AWD CONTROL UNIT

Check AWD control unit input/output signal. Refer to TF-21, "AWD Control Unit Input/Output Signal Reference Values" .

OK or NG

OK >> GO TO 3.
NG >> Check AWD control unit pin terminals for damage or loose connection with harness connector. If any item is damaged, repair or replace damaged parts.

3. CHECK DTC

Perform the self-diagnosis, after driving a vehicle for a while.

OK or NG

OK >> **INSPECTION END**
NG >> Perform self-diagnosis with ECM again. Refer to EC-48, "Emission-Related Diagnostic Information" .

CAN Communication Line

ADS0017O

DIAGNOSTIC PROCEDURE

- Check the following if “CAN COMM CIRCUIT [U1000]” is detected in self-diagnosis results of CONSULT-II.

1. CHECK CAN COMMUNICATION CIRCUIT

With CONSULT-II

1. Turn ignition switch “ON” and start engine.
2. Select “SELF-DIAG RESULTS” mode for “ALL MODE AWD/4WD” with in CONSULT-II.
3. Perform the self-diagnosis.

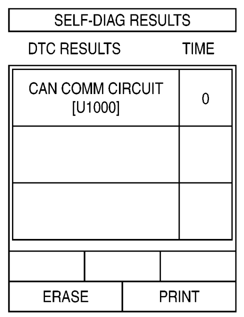

SDIA1850E

Is “CAN COMM CIRCUIT [U1000]” displayed?

YES >> Print out CONSULT-II screen and go to LAN-4, "TROUBLE DIAGNOSES WORK FLOW" .

NO >> **INSPECTION END**

TROUBLE DIAGNOSIS FOR SYMPTOMS

PFP:00007

AWD Indicator Lamp and LOCK Indicator Lamp Do Not Turn ON for Approx. 1 Second When Ignition Switch Is Turned to ON

ADS0017Q

DIAGNOSTIC PROCEDURE

1. CHECK SYSTEM FOR CAN COMMUNICATION LINE

Perform self-diagnosis. Refer to TF-23, "SELF-DIAG RESULTS MODE" .

Is “CAN COMM CIRCUIT [U1000]” displayed?

YES >> Perform trouble diagnosis for CAN communication line. Refer to TF-36, "CAN Communication Line" .

NO >> GO TO 2.

2. CHECK AWD CONTROL UNIT POWER SUPPLY CIRCUIT

1. Turn ignition switch “OFF”.
2. Disconnect AWD control unit harness connector.
3. Turn ignition switch “ON”. (Do not start engine.)
4. Check voltage between AWD control unit harness connector terminals and ground.

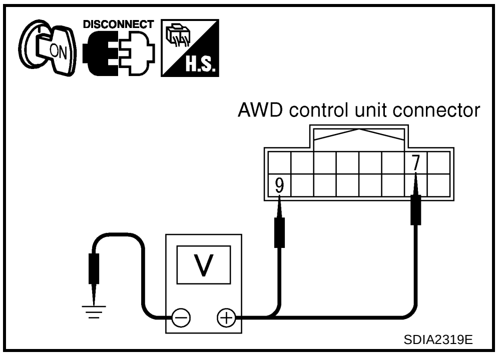

Connector	Terminal (Wire color)	Voltage (Approx.)
M107	7 (GY) - Ground	Battery voltage
	9 (P/L) - Ground	

5. Turn ignition switch “OFF”.
6. Check voltage between AWD control unit harness connector terminals and ground.

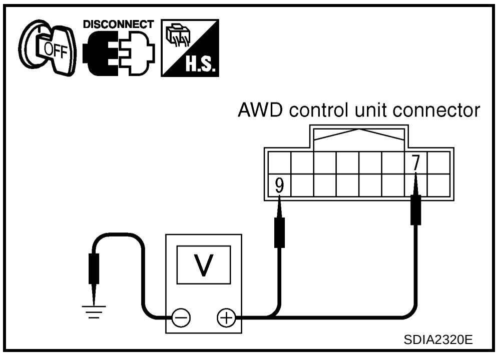

Connector	Terminal (Wire color)	Voltage (Approx.)
M107	7 (GY) - Ground	0V
	9 (P/L) - Ground	Battery voltage

OK or NG

OK >> GO TO 3.

NG >> Check the following. If any item is damaged, repair or replace damaged parts.

- 10A fuse [No. 8, located in the fuse block (J/B) or No. 37, located in the fuse and fusible link box]
- Harness for short or open between battery and AWD control unit harness connector terminal 9
- Harness for short or open between ignition switch and AWD control unit harness connector terminal 7
- Ignition switch. Refer to PG-2, "POWER SUPPLY ROUTING" .

3. CHECK AWD CONTROL UNIT GROUND CIRCUIT

1. Turn ignition switch “OFF”.
2. Disconnect AWD control unit harness connector.
3. Check continuity between AWD control unit harness connector M107 terminals 10 (B/R), 11 (B/R) and ground.

   Continuity should exist.

   Also check harness for short to ground and short to power.

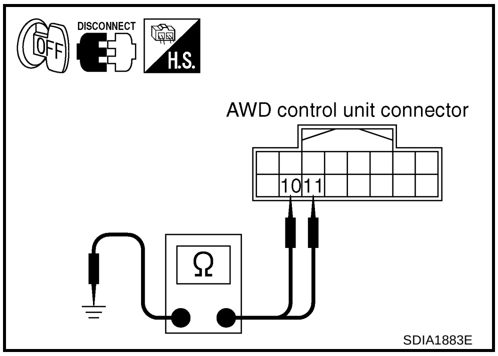

OK or NG

OK >> GO TO 4.
NG >> Repair open circuit or short to ground or short to power in harness or connectors.

4. CHECK AWD CONTROL UNIT

Check AWD control unit input/output signal. Refer to TF-21, "AWD Control Unit Input/Output Signal Reference Values" .

OK or NG

OK >> GO TO 5.
NG >> Check AWD control unit pin terminals for damage or loose connection with harness connector. If any item is damaged, repair or replace damaged parts.

5. SYMPTOM CHECK

Check again.

OK or NG

OK >> **INSPECTION END**
NG >> Replace unified meter control unit assembly. Refer to DI-23, "Disassembly and Assembly for Combination Meter" .

AWD Warning Lamp Does Not Turn ON When Ignition Switch Is Turned to ON

ADS0017R

DIAGNOSTIC PROCEDURE

1. CHECK SYSTEM FOR CAN COMMUNICATION LINE

Perform self-diagnosis. Refer to TF-23, "SELF-DIAG RESULTS MODE" .

Is “CAN COMM CIRCUIT [U1000]” displayed?

YES >> Perform trouble diagnosis for CAN communication line. Refer to TF-36, "CAN Communication Line" .
NO >> GO TO 2.

2. CHECK AWD CONTROL UNIT

Check AWD control unit input/output signal. Refer to TF-21, "AWD Control Unit Input/Output Signal Reference Values" .

OK or NG

OK >> GO TO 3.
NG >> Check AWD control unit pin terminals for damage or loose connection with harness connector. If any item is damaged, repair or replace damaged parts.

A B C TF E F G H I J K L M

3. SYMPTOM CHECK

Check again.

OK or NG

OK >> **INSPECTION END**

NG >> Replace unified meter control unit assembly. Refer to DI-23, "Disassembly and Assembly for Combination Meter" .

AWD Warning Lamp Does Not Turn OFF Several Seconds After Engine Started

ADS0017S

DIAGNOSTIC PROCEDURE

1. CHECK SELF-DIAGNOSIS RESULTS

Perform self-diagnosis. Refer to TF-23, "SELF-DIAG RESULTS MODE" .

Is any malfunction detected by self-diagnosis?

YES >> Check the malfunctioning system.

NO >> GO TO 2.

2. CHECK AWD CONTROL UNIT POWER SUPPLY CIRCUIT

1. Turn ignition switch “OFF”.
2. Disconnect AWD control unit harness connector.
3. Turn ignition switch “ON”. (Do not start engine.)
4. Check voltage between AWD control unit harness connector terminals and ground.

Connector	Terminal (Wire color)	Voltage (Approx.)
M107	7 (GY) - Ground	Battery voltage
	9 (P/L) - Ground	

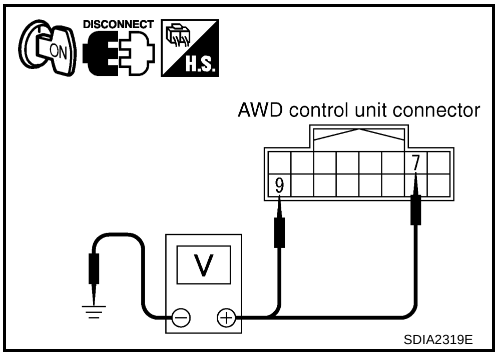

SDIA2319E

5. Turn ignition switch “OFF”.
6. Check voltage between AWD control unit harness connector terminals and ground.

Connector	Terminal (Wire color)	Voltage (Approx.)
M107	7 (GY) - Ground	0V
	9 (P/L) - Ground	Battery voltage

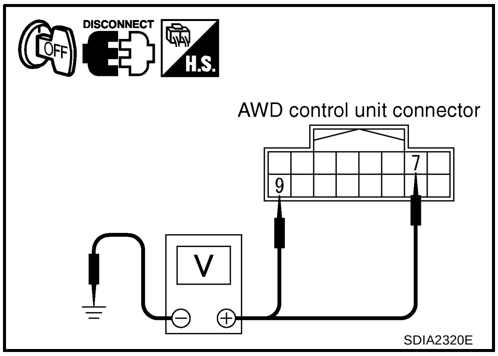

SDIA2320E

OK or NG

OK >> GO TO 3.

NG >> Check the following. If any item is damaged, repair or replace damaged parts.

- 10A fuse [No. 8, located in the fuse block (J/B) or No. 37, located in the fuse and fusible link box]
- Harness for short or open between battery and AWD control unit harness connector terminal 9
- Harness for short or open between ignition switch and AWD control unit harness connector terminal 7
- Ignition switch. Refer to PG-2, "POWER SUPPLY ROUTING" .

3. CHECK AWD CONTROL UNIT GROUND CIRCUIT

1. Turn ignition switch “OFF”.
2. Disconnect AWD control unit harness connector.
3. Check continuity between AWD control unit harness connector M107 terminals 10 (B/R), 11 (B/R) and ground.

Continuity should exist.

Also check harness for short to ground and short to power.

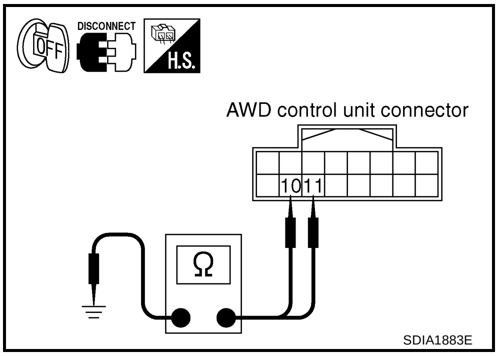

OK or NG

OK >> GO TO 4.
NG >> Repair open circuit or short to ground or short to power in harness or connectors.

4. CHECK AWD CONTROL UNIT

Check AWD control unit input/output signal. Refer to TF-21, "AWD Control Unit Input/Output Signal Reference Values" .

OK or NG

OK >> GO TO 5.
NG >> Check AWD control unit pin terminals for damage or loose connection with harness connector. If any item is damaged, repair or replace damaged parts.

5. SYMPTOM CHECK

Check again.

OK or NG

OK >> **INSPECTION END**
NG >> Replace unified meter control unit assembly. Refer to DI-23, "Disassembly and Assembly for Combination Meter" .

AWD Mode Cannot Be Switched After Engine Is Started

ADS0017T

DIAGNOSTIC PROCEDURE

1. CHECK AWD WARNING LAMP

Confirm AWD warning lamp.

Does AWD warning lamp turn on?

YES >> Go to TF-39, "AWD Warning Lamp Does Not Turn OFF Several Seconds After Engine Started" .
NO >> GO TO 2.

2. CHECK SYSTEM FOR AWD MODE SWITCH

Perform trouble diagnosis for AWD mode switch system. Refer to TF-33, "AWD Mode Switch" .

OK or NG

OK >> GO TO 3.
NG >> Repair or replace damaged parts.

3. CHECK SYSTEM FOR CAN COMMUNICATION LINE

Perform self-diagnosis. Refer to TF-23, "SELF-DIAG RESULTS MODE" .

Is “CAN COMM CIRCUIT [U1000]” displayed?

YES >> Perform trouble diagnosis for CAN communication line. Refer to TF-36, "CAN Communication Line" .
NO >> GO TO 4.

4. CHECK AWD CONTROL UNIT

Check AWD control unit input/output signal. Refer to TF-21, "AWD Control Unit Input/Output Signal Reference Values" .

OK or NG

OK >> GO TO 5.
NG >> Check AWD control unit pin terminals for damage or loose connection with harness connector. If any item is damaged, repair or replace damaged parts.

5. SYMPTOM CHECK

Check again.

OK or NG

OK >> **INSPECTION END**
NG >> Replace unified meter control unit assembly. Refer to DI-23, "Disassembly and Assembly for Combination Meter" .

Heavy Tight-Corner Braking Symptom Occurs When Vehicle Is Driven in AUTO Mode and Steering Wheel Is Turned Fully to Either Side after Engine Is Started

ADS0017U

NOTE:

- **Light tight-corner braking symptom may occur depending on driving conditions in AUTO mode. This is not malfunction.**
- **Heavy tight-corner braking symptom occurs when vehicle is driven in the following conditions: LOCK mode, steering wheel is turned fully to either side, and accelerator pedal was depressed.**

DIAGNOSTIC PROCEDURE

1. CHECK SYSTEM FOR CAN COMMUNICATION LINE

Perform self-diagnosis. Refer to TF-23, "SELF-DIAG RESULTS MODE" .

Is “CAN COMM CIRCUIT [U1000]” displayed?

YES >> Perform trouble diagnosis for CAN communication line. Refer to TF-36, "CAN Communication Line" .
NO >> GO TO 2.

2. CHECK SYSTEM FOR AWD MODE SWITCH

Perform trouble diagnosis for AWD mode switch system. Refer to TF-33, "AWD Mode Switch" .

OK or NG

OK >> GO TO 3.
NG >> Repair or replace damaged parts.

3. CHECK ACCELERATOR PEDAL POSITION SIGNAL CIRCUIT

Perform self-diagnosis for ECM. Refer to EC-48, "Emission-Related Diagnostic Information" .

Is any malfunction detected by self-diagnosis?

YES >> Check the malfunctioning system.
NO >> GO TO 4.

4. CHECK SYSTEM FOR AWD SOLENOID

Perform trouble diagnosis for AWD solenoid system. Refer to TF-28, "AWD Solenoid" .

OK or NG

OK >> GO TO 5.
NG >> Repair or replace damaged parts.

5. CHECK ELECTRIC CONTROLLED COUPLING

1. Turn ignition switch “OFF”.
2. Set selector lever (shift lever) to “N” (neutral) position and disengage the parking brake.
3. Lift up vehicle.
4. Rotate propeller shaft by hand.
5. Hold both the right and left rear wheel lightly.

Does rear wheel rotate?

YES >> Replace electric controlled coupling for mechanical malfunction (clutch sticking etc.). Refer to RFD-16, "Disassembly and Assembly" .

NO >> GO TO 6.

6. SYMPTOM CHECK

Check again.

OK or NG

OK >> **INSPECTION END**

NG >> GO TO 7.

7. CHECK AWD CONTROL UNIT

Check AWD control unit input/output signal. Refer to TF-21, "AWD Control Unit Input/Output Signal Reference Values" .

OK or NG

OK >> **INSPECTION END**

NG >> Check AWD control unit pin terminals for damage or loose connection with harness connector. If any item is damaged, repair or replace damaged parts.

Vehicle Does Not Enter AWD Mode Even Though AWD Warning Lamp Turned to OFF

ADS0017V

CAUTION:

Make sure that parking brake is securely released if the symptom has occurred at vehicle speed of 10 km/h (6 MPH) or more.

DIAGNOSTIC PROCEDURE

1. CHECK PARKING BRAKE SWITCH SIGNAL

With CONSULT-II

1. Turn ignition switch “ON”.
2. Select “DATA MONITOR” mode for “ALL MODE AWD/4WD” with CONSULT-II.
3. Operate parking brake and read out monitor “P BRAKE SW”.

Monitor item	Condition	Display value
P BRAKE SW	Parking brake operated	ON
	Parking brake not operated	OFF

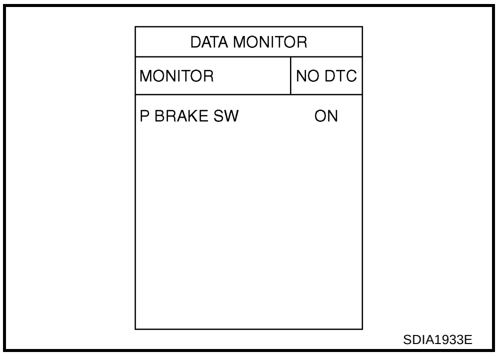

OK or NG

OK >> GO TO 2.

NG >> Check the following. If any item is damaged, repair or replace damaged parts.

- Parking brake switch
- Brake warning lamp circuit. Refer to DI-25, "Wiring Diagram — WARN —" .

2. CHECK AWD SOLENOID

Check AWD solenoid. Refer to TF-31, "COMPONENT INSPECTION" .

OK or NG

OK >> GO TO 3.
NG >> Replace electric controlled coupling for malfunction of AWD solenoid. Refer to RFD-16, "Disassembly and Assembly" .

3. CHECK AWD CONTROL UNIT

Check AWD control unit input/output signal. Refer to TF-21, "AWD Control Unit Input/Output Signal Reference Values" .

OK or NG

OK >> GO TO 4.
NG >> Check AWD control unit pin terminals for damage or loose connection with harness connector. If any item is damaged, repair or replace damaged parts.

4. SYMPTOM CHECK

Check again.

OK or NG

OK >> **INSPECTION END**
NG >> Replace electric controlled coupling for mechanical malfunction (mechanical engagement of clutch is not possible.). Refer to RFD-16, "Disassembly and Assembly" .

While Driving, AWD Warning Lamp Flashes Rapidly (When Flashing in Approx. 1 Minute and Then Turning OFF)

ADS0017W

NOTE:
Rapid flashing: 2 times/second
This symptom protects drivetrain parts when a heavy load is applied to the electric controlled coupling and multiple disc clutch temperature increases. It is not a malfunction.
When this symptom occurs, stop vehicle and allow it to idle for some times. Flashing will stop and system will be restored.

While Driving, AWD Warning Lamp Flashes Slowly (When Continuing to Flash Until Turning Ignition Switch OFF)

ADS0017X

NOTE:
Slow flashing: 1 time/2 seconds

DIAGNOSTIC PROCEDURE

1. CHECK TIRE

Check the following.

- Tire pressure
- Wear condition
- Front and rear tire size (There shall be no difference of tire size between front and rear tires.)

OK or NG

OK >> GO TO 2.
NG >> Drive at vehicle speed of 20 km/h (12 MPH) or more for 5 seconds or more after repairing or replacing damaged parts. (Initialize improper size tire information.)

2. CHECK INPUT SIGNAL OF TIRE DIAMETER

With CONSULT-II

1. Start engine.
2. Drive at 20 km/h (12 MPH) or more for approx. 200 seconds.
3. Select “DATA MONITOR” mode for “ALL MODE AWD/4WD” with CONSULT-II.
4. Check monitor “DIS-TIRE MONI”.

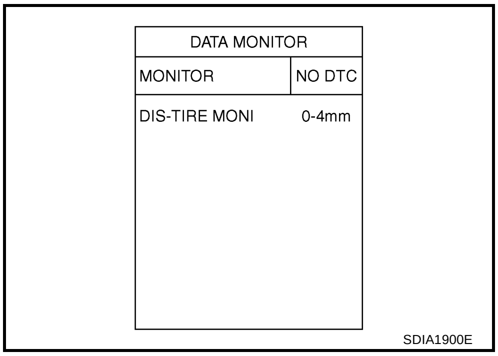

Display of “DIS-TIRE MONI”

“0-4mm”>>**INSPECTION END**
Except for “0-4mm”>>GO TO 3.

3. CHECK AWD CONTROL UNIT

Check AWD control unit input/output signal. Refer to TF-21, "AWD Control Unit Input/Output Signal Reference Values" .

OK or NG

OK >> GO TO 4.
NG >> Check AWD control unit pin terminals for damage or loose connection with harness connector. If any item is damaged, repair or replace damaged parts.

4. SYMPTOM CHECK

Check again.

OK or NG

OK >> **INSPECTION END**
NG >> Replace AWD control unit.

AWD CONTROL UNIT

PFP:41650

Removal and Installation

ADS0017Y

REMOVAL

1. Remove cluster lid “A”. Refer to IP-11, "Removal and Installation" .
2. Remove front speaker grille. Refer to IP-11, "Removal and Installation" .
3. Remove driver box. Refer to IP-11, "Removal and Installation" .
4. Disconnect AWD control unit connector.
5. Remove AWD control unit.

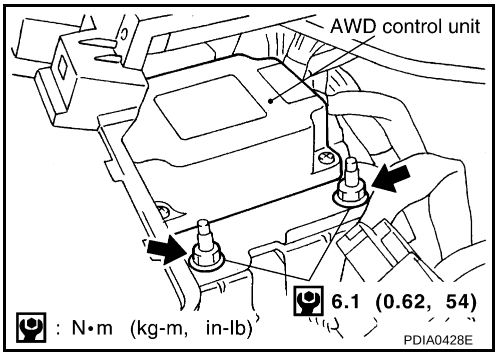

INSTALLATION

Install in the reverse order of removal.

A B C TF E F G H I J K L M

SIDE OIL SEAL

PFP:33142

Removal and Installation

ADS0017Z

NOTE:
Transfer side oil seal is attached to transaxle assembly. Replace it when tranfer assembly is removed from vehicle.

REMOVAL

1. Remove drive shaft. Refer to FAX-16, "Removal and Installation (RH)" .
2. Remove side shaft. Refer to FAX-16, "Removal and Installation (RH)" .
   CAUTION:
   Be careful not to damage gear ring oil seal in transfer.
3. Remove oil seal with a flat-bladed screwdriver.
   CAUTION:
   Be careful not to damage adapter case.

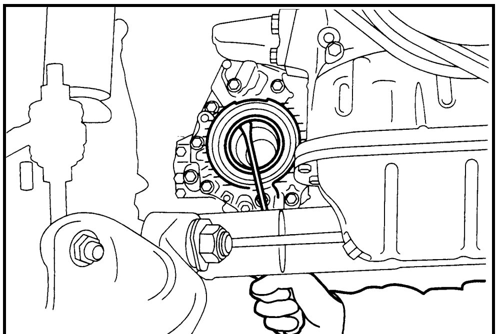

TFB0202D

INSTALLATION

1. Apply multi-purpose grease to oil seal lips. As shown in the figure, install oil seal so that it becomes flush with the case end surface, using the drift.

   Tool number : KV38101700 (—)

   CAUTION:
   - **Do not reuse oil seal.**
   - **When installing, do not incline oil seal.**
2. Install side shaft. Refer to FAX-16, "Removal and Installation (RH)" .
   CAUTION:
   Be careful not to damage gear ring oil seal in transfer.
3. Install drive shaft. Refer to FAX-16, "Removal and Installation (RH)" .
4. Check oil level. Refer to TF-9, "Checking Transfer Oil" .

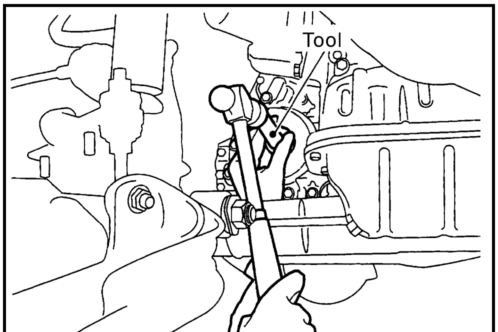

SDIA2559E

AIR BREATHER HOSE

PFP:31098

Components

ADS00180

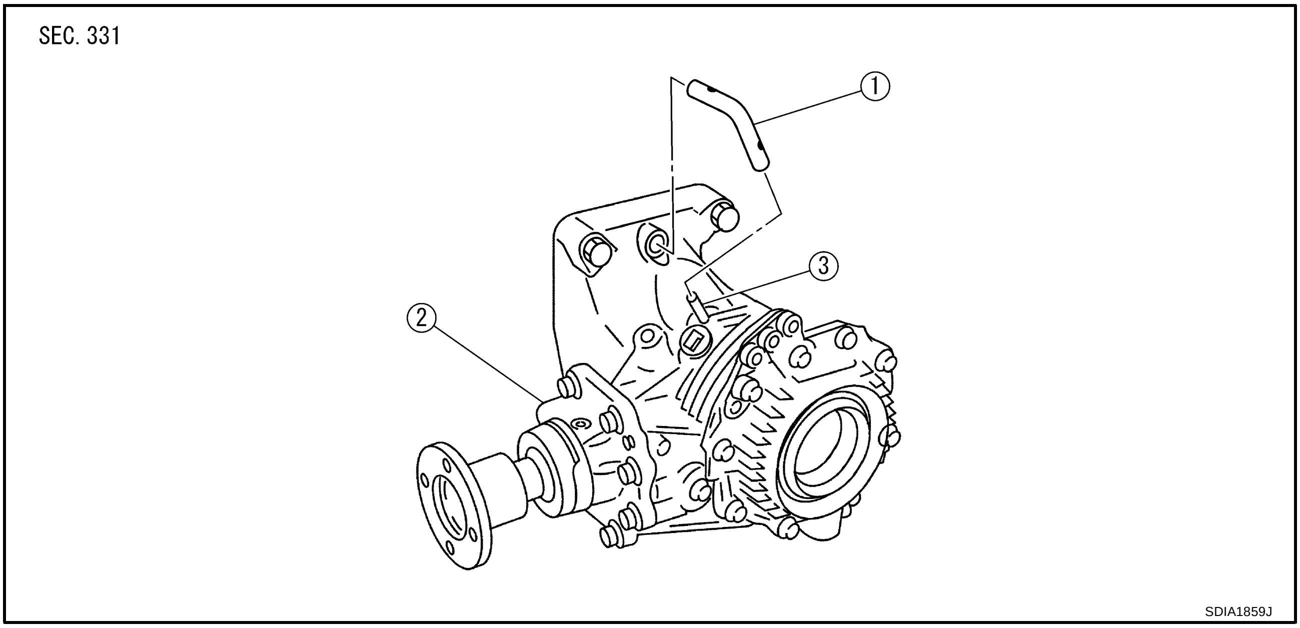

1. Air breather hose
2. Transfer assembly
3. Breather tube

Removal and Installation

ADS00181

Note the following, when removal and installation.

CAUTION:

Make sure there are no pinched or restricted areas on the air breather hose caused by bending or winding when installing it.

- Be sure to insert air breather hose into breather tube (metal connector) until hose end reaches the tube's base.

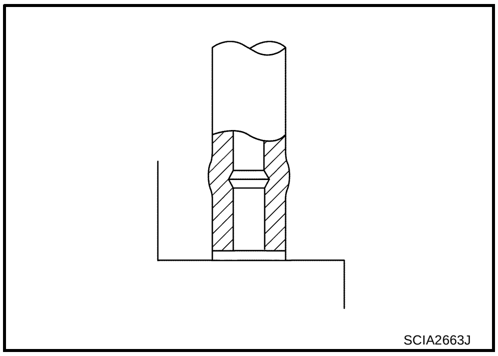

- Be sure to insert the hose till the paint mark.

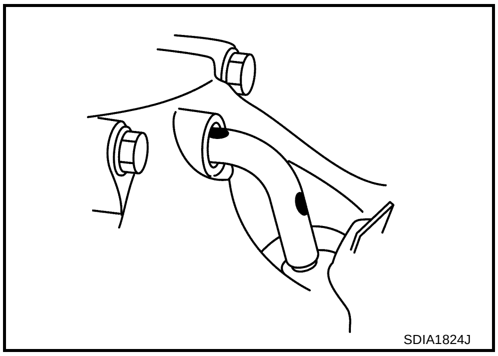

TRANSFER ASSEMBLY

PFP:33100

Removal and Installation

ADS00182

COMPONENTS

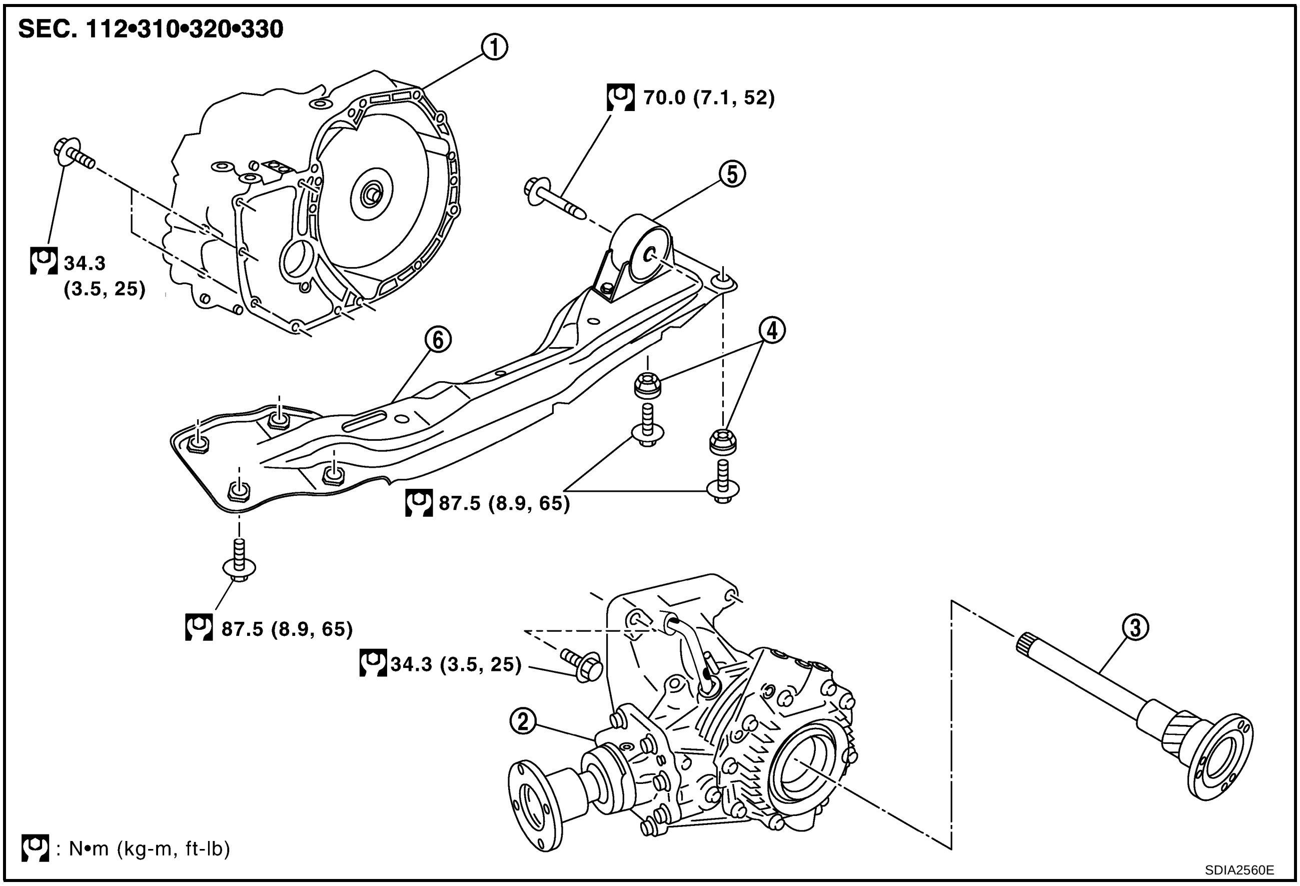

1. Transaxle assembly	2. Transfer assembly	3. Side shaft
4. Grommet	5. Front engine mounting insulator	6. Center member

REMOVAL

1. Remove exhaust front tube. Refer to EX-3, "Removal and Installation" .
2. Remove propeller shaft. Refer to PR-4, "Removal and Installation" .
3. Remove front drive shaft (RH). Refer to FAX-16, "Removal and Installation (RH)" .
4. Remove side shaft. Refer to FAX-16, "Removal and Installation (RH)" .

   CAUTION:
   Be careful not to damage oil seal.
5. Remove air breather hose. Refer to TF-47, "AIR BREATHER HOSE" .
6. Support transaxle assembly with a jack.
7. Remove center member with power tool. Refer to EM-74, "ENGINE ASSEMBLY" .
8. Remove suspension member with power tool. Refer to FSU-17, "FRONT SUSPENSION MEMBER" .
9. Remove rear engine mounting bracket with power tool. Refer to EM-74, "ENGINE ASSEMBLY" .
10. Support transfer assembly with a jack.
11. Remove bolts fixing transaxle assembly and transfer assembly with power tool.
12. Remove the transfer assembly from vehicle.

    CAUTION:
    Be careful not to damage oil seal of transaxle.

INSTALLATION

Note the following, and install in the reverse order of removal.

- When installing transfer to transaxle, install the mounting bolts following the specification below.

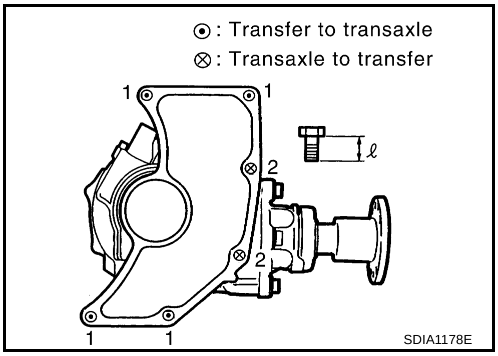

Bolt No.	1	2
Quantity	4	2
Bolt length " ℓ " mm (in)	65 (2.56)	40 (1.57)
Tightening torque N·m (kg-m, ft-lb)	34.3 (3.5, 25)	

CAUTION:
When installing transfer to transaxle, be careful not to damage oil seal of transaxle.

- After the installation, check the oil level and oil leakage. Refer to TF-9, "Checking Transfer Oil" .

Disassembly and Assembly

ADS00183

COMPONENTS

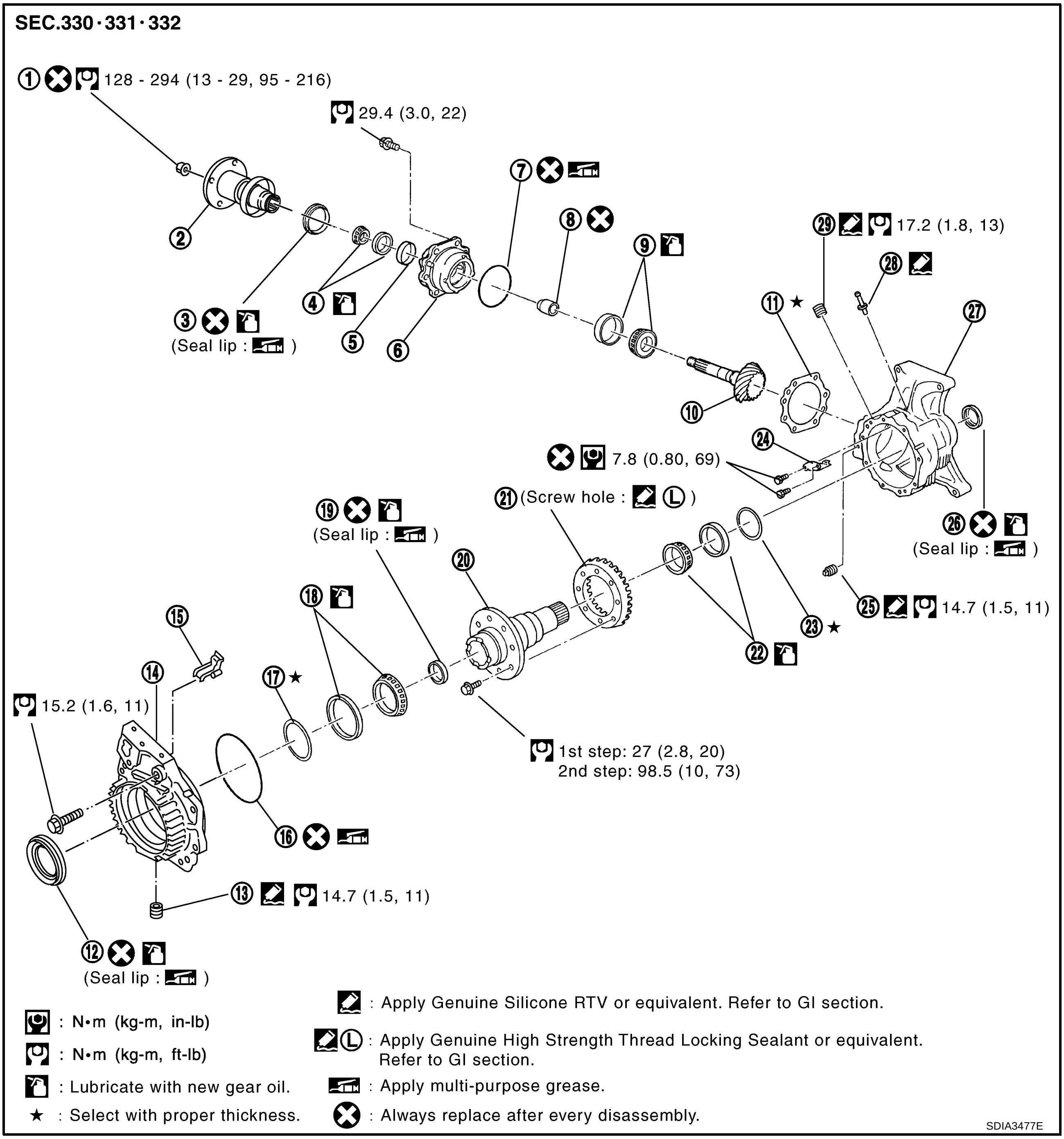

1. Pinion lock nut	2. Companion flange	3. Pinion sleeve oil seal
4. Pinion rear bearing	5. Dust cover	6. Pinion sleeve
7. O-ring	8. Collapsible spacer	9. Pinion front bearing
10. Drive pinion	11. Pinion sleeve shim	12. Adapter case oil seal
13. Drain plug	14. Adapter case	15. Oil gutter
16. O-ring	17. Gear ring bearing adjusting shim (Adapter case side)	18. Gear ring bearing (Adapter case side)
19. Gear ring oil seal	20. Gear ring	21. Drive gear
22. Gear ring bearing (Transfer case side)	23. Gear ring bearing adjusting shim (Transfer case side)	24. Oil defense
25. Filler plug	26. Transfer case oil seal	27. Transfer case
28. Breather tube	29. Plug	

ASSEMBLY INSPECTION

Backlash

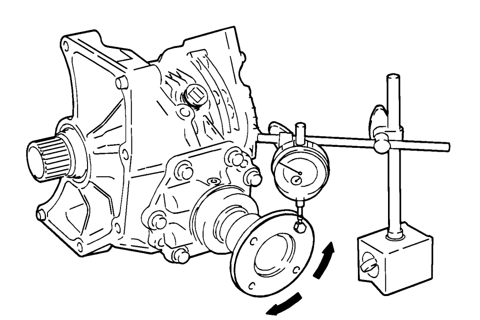
SDIA1937J

1. Install a bolt to companion flange.
2. Fit a dial indicator onto the bolt.
3. Measure the circumference backlash of companion flange, and make sure it satisfies the specification below.

   Backlash: 0.13 - 0.19 mm (0.0051 - 0.0075 in)

   - If measured value is out of the specification, disassemble it to check and adjust each part.

Tooth Contact

1. Remove pinion sleeve assembly. Refer to TF-55, "Pinion Sleeve Assembly" .
2. Apply red lead to drive gear.

   CAUTION:
   Apply red lead to both the faces of 3 to 4 gears at 4 locations evenly spaced on drive gear.

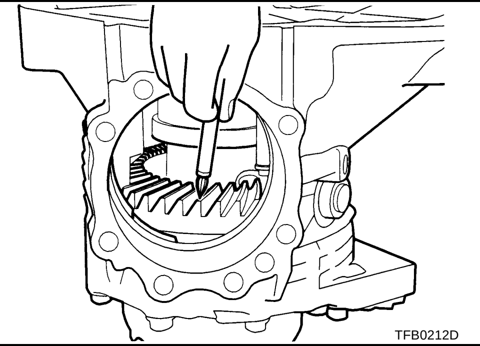
TFB0212D

3. Install pinion sleeve shims and pinion sleeve assembly. Refer to TF-65, "Pinion Sleeve Assembly" .
4. Remove the plug on the upper side of transfer case.
   When installing plug, apply sealant on screw part, and tighten it at the specified torque. Refer to TF-50, "COMPONENTS" .
   - **Use Genuine Silicone RTV or equivalent. Refer to GI-48, "Recommended Chemical Products and Sealants" .**
5. Rotate companion flange back and forth several times, and check drive pinion gear to drive gear tooth contact by viewing from the plug hole.

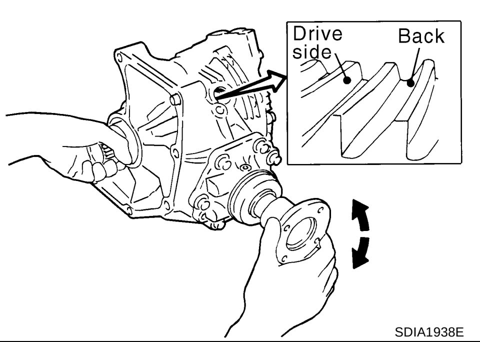

SDIA1938E

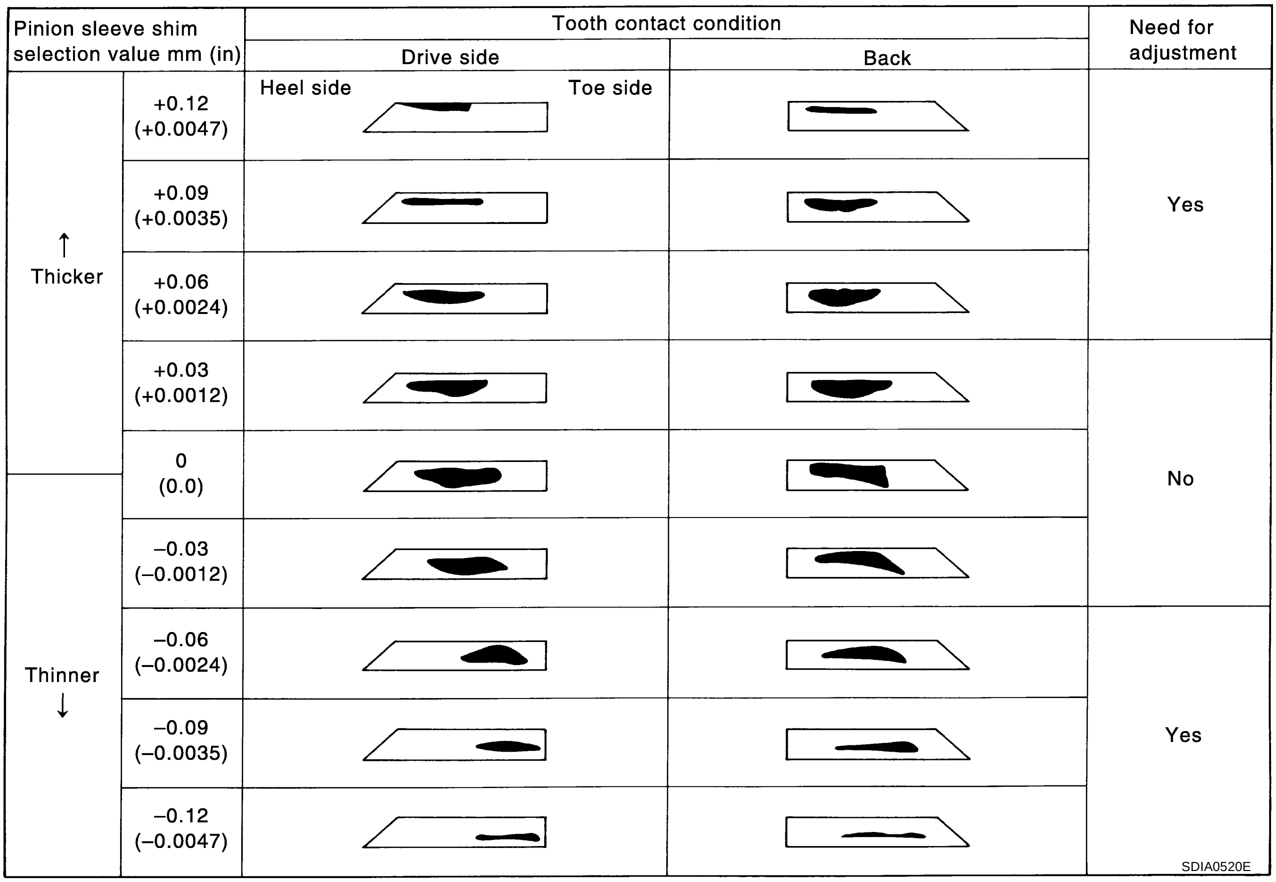

Pinion sleeve shim selection value mm (in)		Tooth contact condition		Need for adjustment
		Drive side	Back	
↑ Thicker	+0.12 (+0.0047)	Heel side / Toe side		Yes
	+0.09 (+0.0035)			
	+0.06 (+0.0024)			
	+0.03 (+0.0012)			No
	0 (0.0)			
Thinner ↓	−0.03 (−0.0012)			
	−0.06 (−0.0024)			Yes
	−0.09 (−0.0035)			
	−0.12 (−0.0047)			

SDIA0520E

6. If tooth contact is poorly adjusted, adjust pinion height (dimension X) in the following manner.

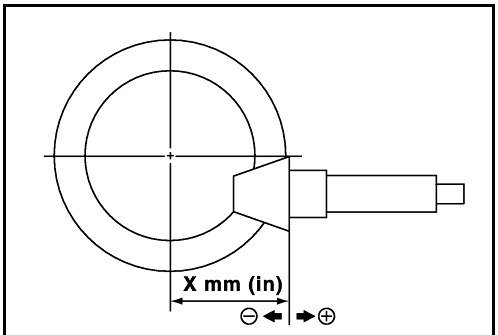

SDIA0517E

- If the tooth contact is near the face (face contact), or near the heal (heel contact), thin pinion sleeve shims to move drive pinion closer to drive gear.
  Refer to TF-68, "Pinion Sleeve Shim" .

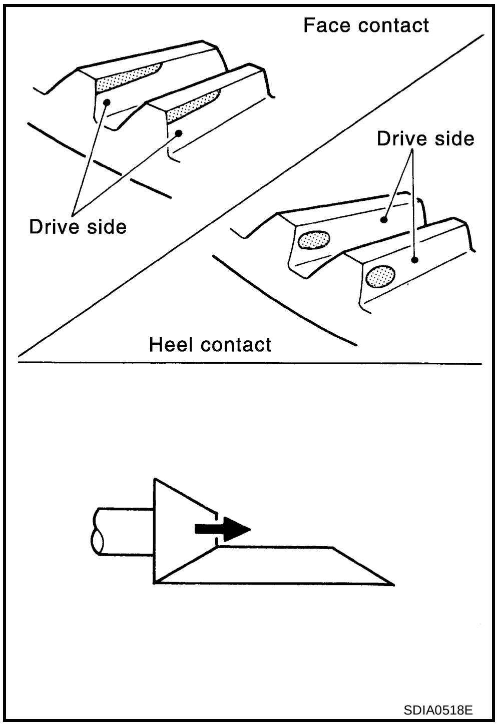

- If the tooth contact is near the flank (flank contact), or near the toe (toe contact), thicken pinion sleeve shims to move drive pinion farther from drive gear.
  Refer to TF-68, "Pinion Sleeve Shim" .

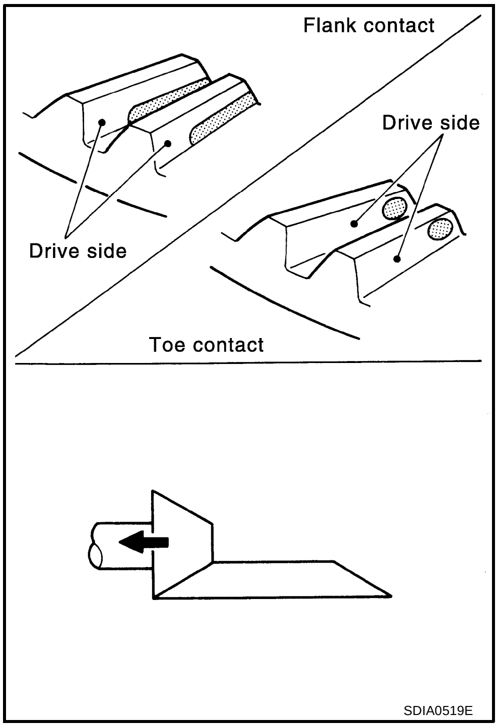

Pinion Bearing Preload Torque

1. Remove pinion sleeve assembly. Refer to TF-55, "Pinion Sleeve Assembly" .
2. Rotate companion flange back and forth 2 to 3 times. Check for unusual noise, rotation malfunction, and other malfunctions.
3. Rotate companion flange at least 20 times to check for smooth operation of the bearing.

A B C TF E F G H I J K L M

4. Measure the preload torque of pinion bearing, using the preload gauge.

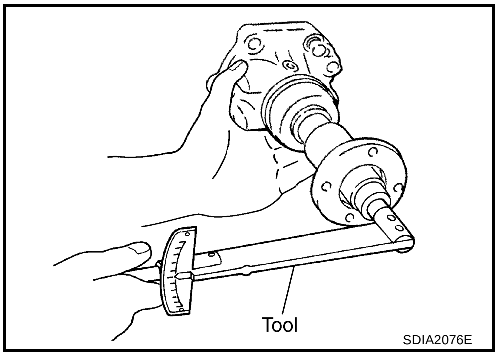

Tool number : ST3127S000 (J-25765-A)

Preload torque:

0.10 - 0.39 N·m (0.01 - 0.04 kg-m, 1 - 3 in-lb)

CAUTION:

Every rotational part shall rotate smoothly with specified gear oil.

- If measured value is out of the specification, disassemble pinion sleeve assembly to check and adjust each part.

Total Preload Torque

1. Measure pinion bearing preload torque (P_1). Refer to TF-53, "Pinion Bearing Preload Torque" .

Pinion bearing preload torque (P1):

0.10 - 0.39 N·m (0.01 - 0.04 kg-m, 1 - 3 in-lb)

2. Install pinion sleeve shims and pinion sleeve assembly.
3. Rotate companion flange at least 20 times to check for smooth operation of the bearing.
4. Measure the total preload torque, sing the preload gauge.

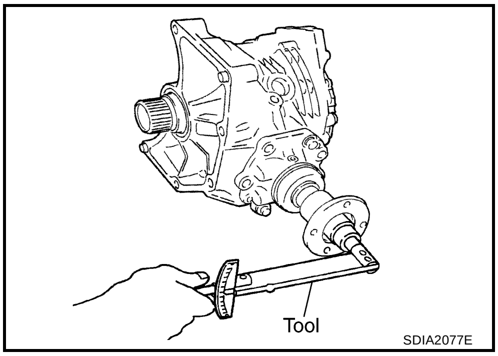

Tool number : ST3127S000 (J-25765-A)

Total preload torque

With all oil seals:

P_1 + 0.16 - 0.22 N·m (0.016 - 0.023 kg-m, 1.4 - 1.9 in-lb)

Without transfer case oil seal and adapter case oil seal:

P_1 + 0.06 - 0.12 N·m (0.006 - 0.013 kg-m, 0.6 - 1.1 in-lb)

- If measured value is out of the specification, disassemble it to check and adjust each part. When measuring the total preload torque after the disassembly, measure it with the transfer case oil seals and gear ring oil seals removed, then install the oil seals.

Companion Flange Runout

1. Fit a dial indicator onto companion flange face (inner side of the propeller shaft mounting bolt holes).
2. Rotate companion flange to check for runout.

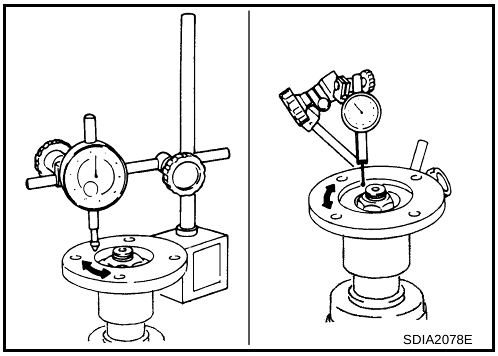

Runout limit: 0.1 mm (0.004 in)

3. Fit a test indicator to the inner side of companion flange (socket diameter).
4. Rotate companion flange to check for runout.

Runout limit: 0.1 mm (0.004 in)

5. If the runout value is outside the repair limit, follow the procedure below to adjust.

a. While changing the phase between companion flange and drive pinion gear by 90° at a time, check runout and determine which phase angle minimizes the runout.

b. If the runout value is still outside of the limit after the phase has been changed, replace the companion flange.

c. If the runout is out of the specification after replacement of companion flange, adjust the assembly status of pinion bearings and drive pinion gear, or replace pinion bearings.

DISASSEMBLY

Pinion Sleeve Assembly

1. Remove pinion sleeve mounting bolts.

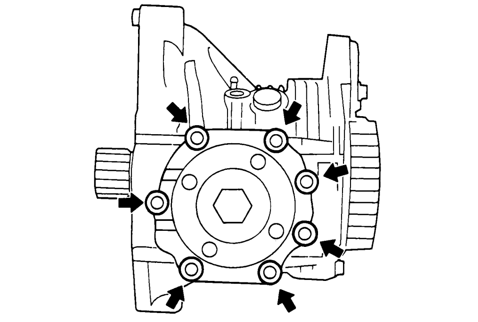

SDIA1803J

2. Tap companion flange to remove pinion sleeve assembly, using a plastic hammer.
3. Remove the pinion sleeve shim.
4. Remove the pinion lock nut.

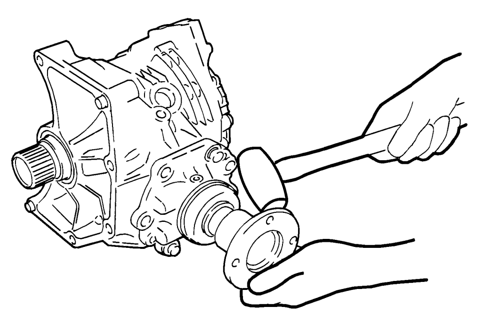

SDIA1861J

5. Remove drive pinion assembly from pinion sleeve with a press, using the drift.

   Tool number : ST33220000 (J-25804-01)

6. Remove companion flange.
7. Remove the O-ring from pinion sleeve.

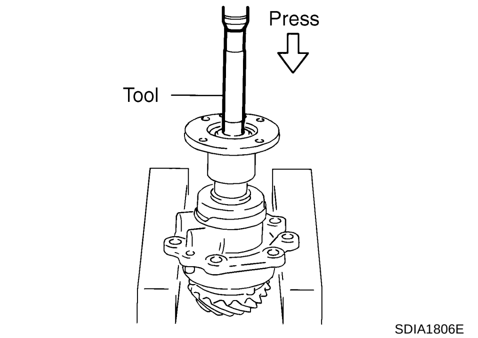

SDIA1806E

8. Remove the pinion sleeve oil seal, using a flat-bladed screw-driver.

   CAUTION:
   Be careful not to damage pinion sleeve.

9. Remove pinion rear bearing inner race.

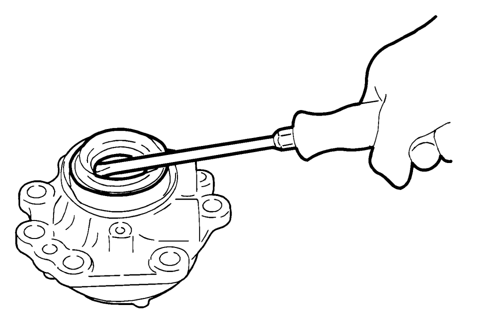

TFB0286D

10. Remove pinion rear bearing outer race, using the puller.

    Tool number : KV381054S0 (J-34286)

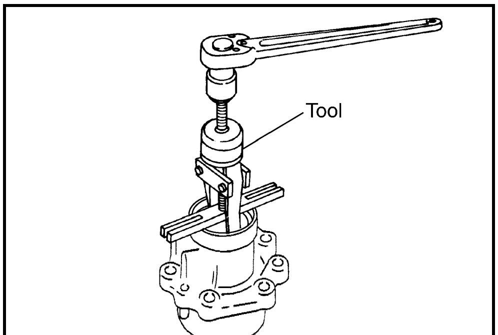

SDIA2079E

11. Remove pinion front bearing outer race, using the puller.

    Tool number : KV381054S0 (J-34286)

12. Remove dust cover.

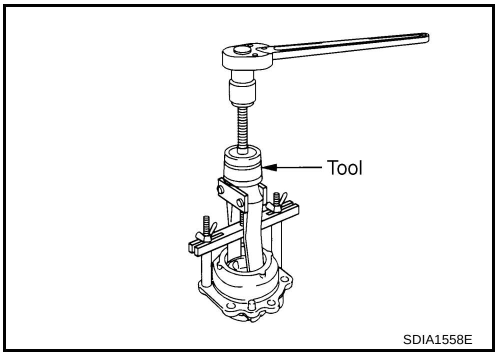

SDIA1558E

13. Remove collapsible spacer from drive pinion.
14. Press pinion front bearing inner race out of drive pinion, using the replacer.

    Tool number : ST30031000 (J-22912-01)

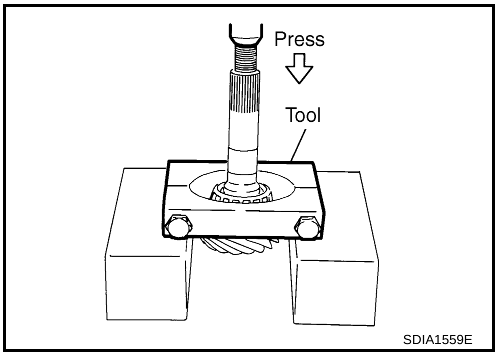

SDIA1559E

Adapter Case

1. Remove adapter case mounting bolts.

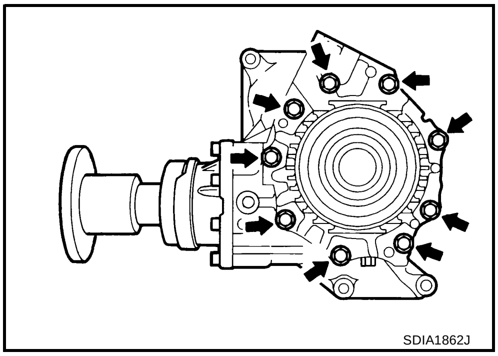
SDIA1862J

2. Tap adapter case to remove, using a plastic hammer.
3. Remove O-ring.

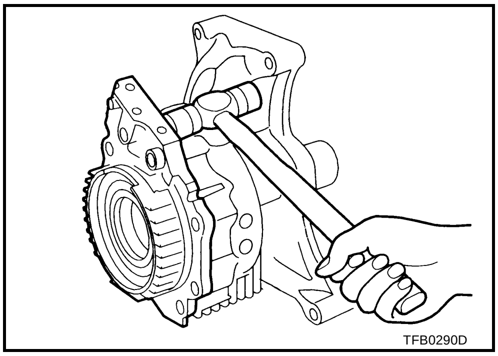
TFB0290D

4. Remove adapter case oil seal, using a flat-bladed screwdriver.

   CAUTION:

   Be careful not to damage adapter case.

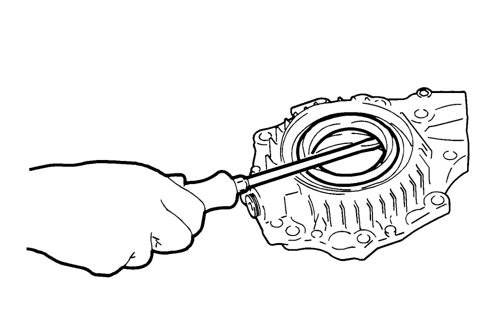

TFB0291D

5. Tap gear ring bearing adjusting shim from the cutout on adapter case, using a brass rod. Remove gear ring bearing adjusting shim and gear ring bearing outer race.

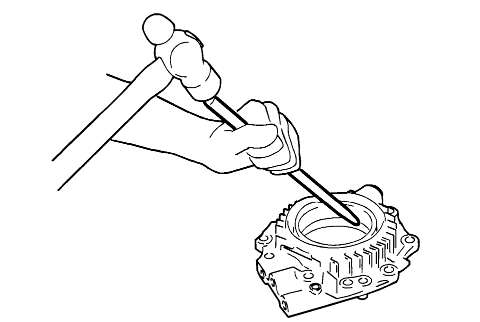

SDIA0529E

6. Remove oil gutter.
7. Remove drain plug.

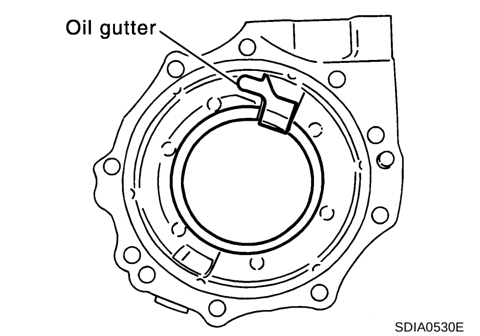

SDIA0530E

Drive Gear Assembly

1. Remove adapter case. Refer to TF-56, "Adapter Case" .
2. Remove drive gear assembly from transfer case.
3. Remove gear ring bearing inner race (adapter case side) on gear ring, using the drift and replacer.

   Tool number : ST33200000 (J-26082)

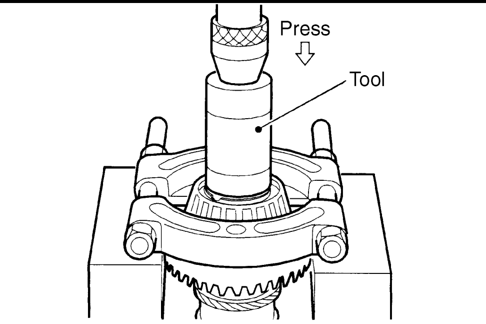

SDIA1560E

4. Remove gear ring bearing inner race (transfer case side) on gear ring, using the drift and replacer.

   Tool number : ST33061000 (J-8107-2)

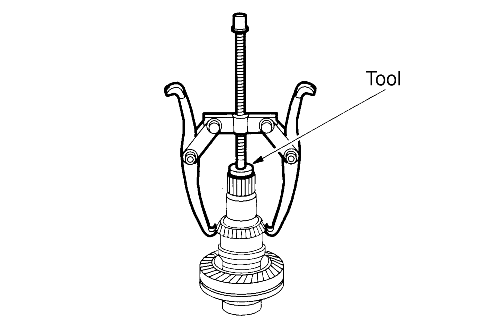

SDIA1561E

5. Remove drive gear mounting bolts.
6. Tap drive gear to remove drive gear from gear ring, using a plastic hammer.

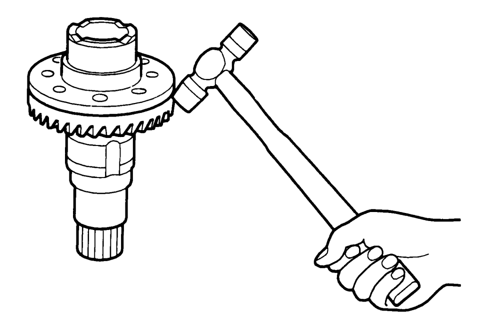
SDIA1807J

7. Remove gear ring oil seal from gear ring, using the puller.

   Tool number : KV381054S0 (J-34286)

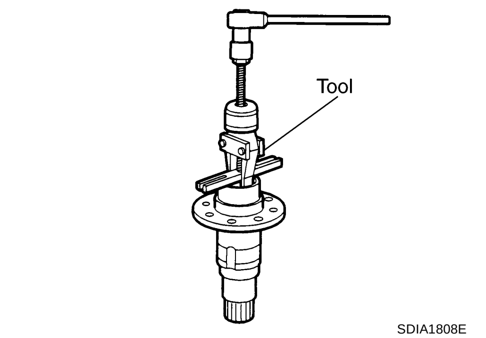

SDIA1808E

Transfer Case

1. Remove pinion sleeve assembly. Refer to TF-55, "Pinion Sleeve Assembly" .
2. Remove adapter case. Refer to TF-56, "Adapter Case" .
3. Remove drive gear assembly from transfer case. Refer to TF-58, "Drive Gear Assembly" .

4. Remove transfer case oil seal, using a flat-bladed screwdriver.

   CAUTION:

   Be careful not to damage transfer case.

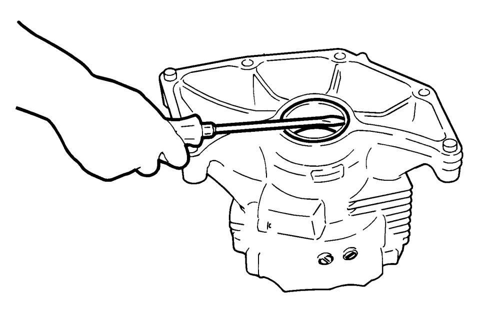

TFB0297D

5. Remove oil defense.

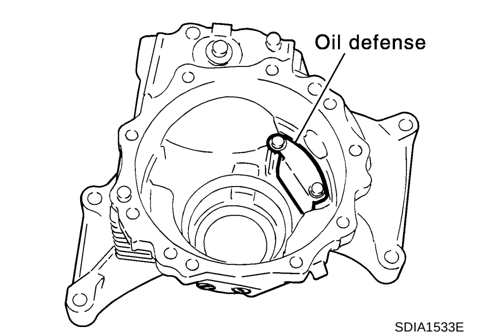

SDIA1533E

6. Tap gear ring bearing adjusting shim evenly from the 2 cutouts on transfer case, using a brass rod. Remove gear ring bearing adjusting shim and gear ring bearing outer race.
7. Remove filler plug, plug and breather tube.

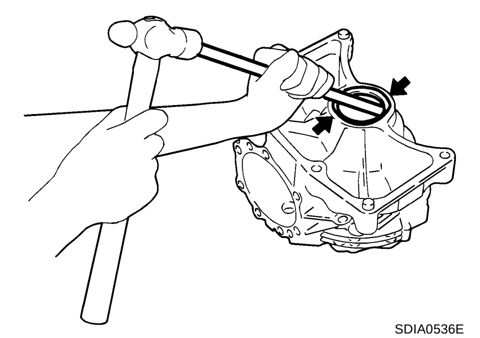

SDIA0536E

INSPECTION AFTER DISASSEMBLY

Gears

- Check the gear faces and shaft for wear, cracks, damage, and seizure.

CAUTION:

If malfunction is detected on drive gear or drive pinion, replace drive gear and drive pinion as a set.

Bearings

- Check for seizure, peeling, wear, corrosion, sticking/unusual noise/roughness in hand turning, and other damage.

CAUTION:

When replacing the bearing, always replace inner race and outer race as a pair.

Washers and Shims

- Check for seizure, damage, and unusual wear.

Oil Seals

- Discard old oil seals, replace with new ones.
- If wear, deterioration of adherence (sealing force of lips), or damage is detected on the lips, replace them.

SELECTING ADJUSTING SHIMS

Measurement points

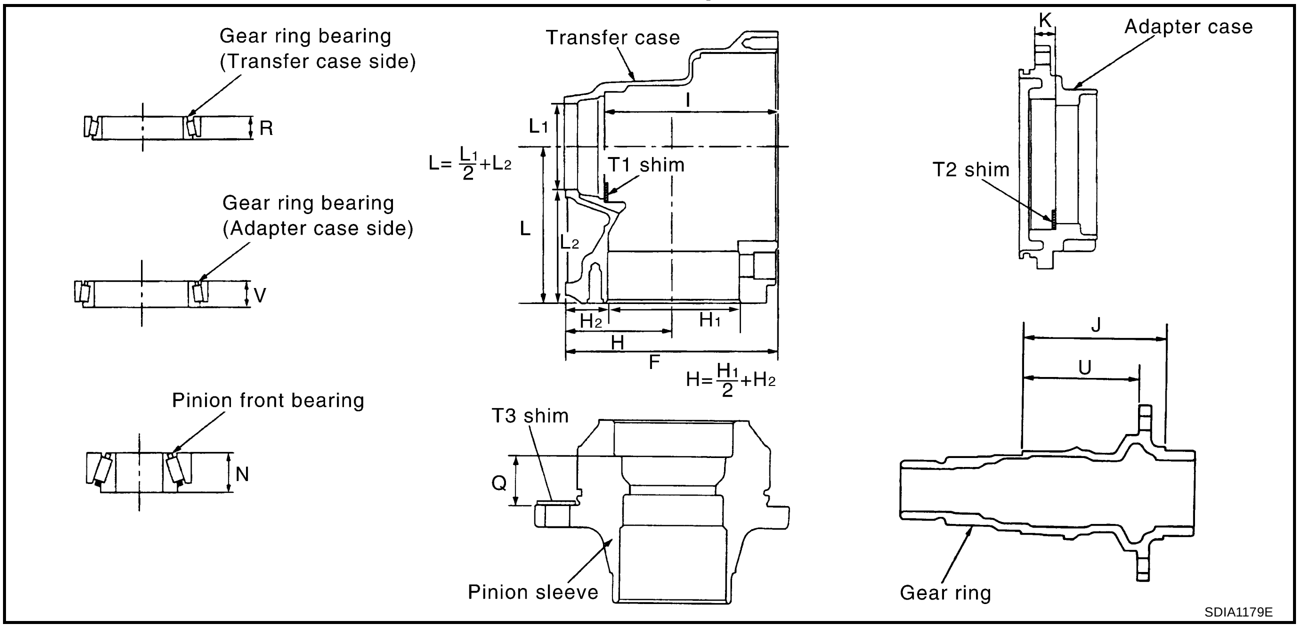

Gear Ring Bearing Adjusting Shim (Transfer Case Side)

1. Measure the points F, H, I, R and U shown in the measurement points.
2. Convert the values F, H, I, R and U according to the procedures below.

F: Value obtained by subtracting 163.00 mm (6.42 in) from the reading [in increments of 0.01 mm (0.0004 in)].

H: Value obtained by subtracting 83.00 mm (3.27 in) from the reading [in increments of 0.01 mm (0.0004 in)].

I: Value obtained by subtracting 131.90 mm (5.19 in) from the reading [in increments of 0.01 mm (0.0004 in)].

R: Value obtained by subtracting 17.00 mm (0.67 in) from the reading [in increments of 0.01 mm (0.0004 in)].

U: Value obtained by subtracting 89.50 mm (3.524 in) from the reading [in increments of 0.01 mm (0.0004 in)].

3. Check dimension Z on the drive gear side face.

NOTE:
Dimension Z indicates the difference between the optimum engagement and the standard dimensions in increments of 0.01mm (0.0004 in) written on the drive gear side face.

4. Use the formula below to calculate gear ring bearing adjusting shim (transfer case side) thickness T_1 .

T_1 = (I - F + H + Z - U - R) × 0.01 mm (0.0004 in) + 1.49 mm (0.0587 in)

5. Select the gear ring bearing adjusting shim (transfer case side).
   - For information on selecting an adjusting shim, refer to TF-67, "Gear Ring Bearing Adjusting Shim (Transfer Case Side)" .

CAUTION:
- **Only one adjusting shim can be selected.**
- **If no adjusting shim with the calculated value is available, select the thicker and closest one.**

Gear Ring Bearing Adjusting Shim (Adapter Case Side)

1. Measure the points F, H, J, K, U and V shown in the measurement points.
2. Convert the values F, H, J, K, U and V according to the procedures below.

F: Value obtained by subtracting 163.00 mm (6.42 in) from the reading [in increments of 0.01 mm (0.0004 in)].

H: Value obtained by subtracting 83.00 mm (3.27 in) from the reading [in increments of 0.01 mm (0.0004 in)].

J: Value obtained by subtracting 109.50 mm (4.31 in) from the reading [in increments of 0.01 mm (0.0004 in)].

K: Value obtained by subtracting 14.40 mm (0.5669 in) from the reading [in increments of 0.01 mm (0.0004 in)].

U: Value obtained by subtracting 89.50 mm (3.524 in) from the reading [in increments of 0.01 mm (0.0004 in)].

V: Value obtained by subtracting 17.00 mm (0.67 in) from the reading [in increments of 0.01 mm (0.0004 in)].

3. Check dimension Z on the drive gear side face.

   NOTE:
   Dimension Z indicates the difference between the optimum engagement and the standard dimensions in increments of 0.01mm (0.0004 in) written on the drive gear side face.
4. Use the formula below to calculate gear ring bearing adjusting shim (adapter case side) thickness T_2 .

   $$T_2 = (K + F - H - Z + U - J - V) \times 0.01 \text{ mm } (0.0004 \text{ in}) + 1.49 \text{ mm } (0.0587 \text{ in})$$

5. Select the gear ring bearing adjusting shim (adapter case side).
   - For information on selecting an adjusting shim, refer to TF-68, "Gear Ring Bearing Adjusting Shim (Adapter Case Side)" .

   CAUTION:
   - **Only one adjusting shim can be selected.**
   - **If no adjusting shim with the calculated value is available, select the thicker and closest one.**

Pinion Sleeve Shim

1. Measure the points L, N and Q shown in the measurement points.
2. Check the dimension S written on the gear end of drive pinion.

   NOTE:
   The dimension S indicates the difference between the optimum engagement and the standard dimensions in increments of 0.01 mm (0.0004 in) written on the gear end of drive pinion.
3. Use the formula below to calculate pinion sleeve shim thickness T_3 .

   $$T_3 = [74.6 \text{ mm } (2.937 \text{ in}) + S] + N + Q - L$$

4. Select the pinion sleeve shim.
   - For information on selecting a pinion sleeve shim, refer to TF-68, "Pinion Sleeve Shim" .

   CAUTION:
   Only one pinion sleeve shim can be selected.

ASSEMBLY

Transfer Case

1. Select gear ring bearing adjusting shim (transfer case side). Refer to TF-60, "SELECTING ADJUSTING SHIMS" .
2. Install selected gear ring bearing adjusting shim (transfer case side) and gear ring bearing outer race (transfer case side), using the drifts

   Tool number A: ST30720000 (J-25405)

   B: KV40101840 (—)

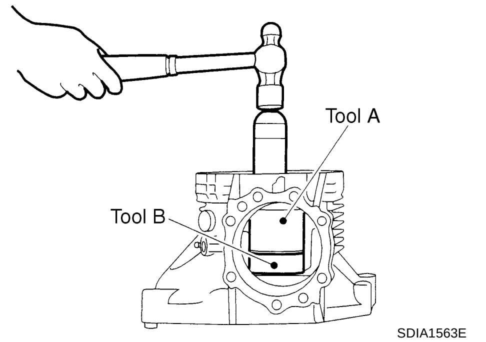

SDIA1563E

3. Install oil defense, and tighten the mounting bolts to the specified torque. Refer to TF-50, "COMPONENTS" . The clearance between oil defense and transfer case (dimension A) should be the following.

   Clearance between oil defense and transfer case

   Dimension A: 1.0 - 3.5 mm (0.04 - 0.138 in)

   CAUTION:
   Do not reuse the mounting bolts.

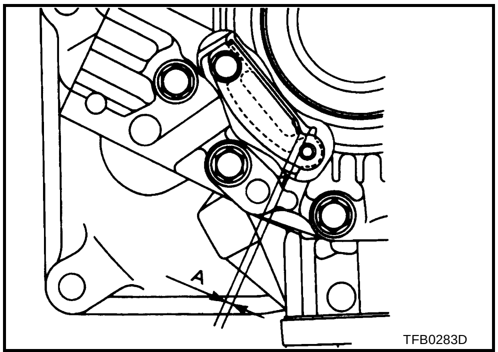

TFB0283D

4. Drive transfer case oil seal until it becomes flush with the case end, using the drift.

   Tool number : ST30720000 (J-25405)

   CAUTION:
   - **When checking the total preload torque, measure it without oil seal, then install oil seal.**
   - **Do not reuse oil seal.**
   - **Apply multi-purpose grease onto oil seal lips, and gear oil onto the circumference of oil seal.**

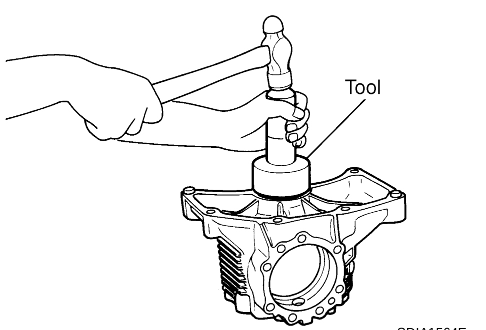

SDIA1564E

5. Apply sealant to filler plug and plug before installing them to transfer case. Refer to TF-50, "COMPONENTS" .
   - **Use Genuine Silicone RTV or equivalent. Refer to GI-48, "Recommended Chemical Products and Sealants" .**
6. Apply sealant to breather tube and install it to transfer case.
   - **Use Genuine Silicone RTV or equivalent. Refer to GI-48, "Recommended Chemical Products and Sealants" .**
7. Install drive gear assembly. Refer to TF-63, "Drive Gear Assembly" .
8. Install adapter case. Refer to TF-64, "Adapter Case" .
9. Install pinion sleeve assembly. Refer to TF-65, "Pinion Sleeve Assembly" .
10. Check backlash, preload torque, tooth contact, and companion flange runout. Refer to TF-51, "ASSEMBLY INSPECTION" .

    CAUTION:
    Measure the total preload torque without oil seal.

Drive Gear Assembly

1. Drive gear ring oil seal into gear ring, using the drift.

   Tool number : ST33230000 (J-25805-01)

   CAUTION:
   - **Do not reuse oil seal.**
   - **Apply multi-purpose grease onto oil seal lips, and gear oil onto the circumference of oil seal.**
   - **The oil seal back position after the installation shall be 56.5 mm (2.22 in) from the gear ring end.**

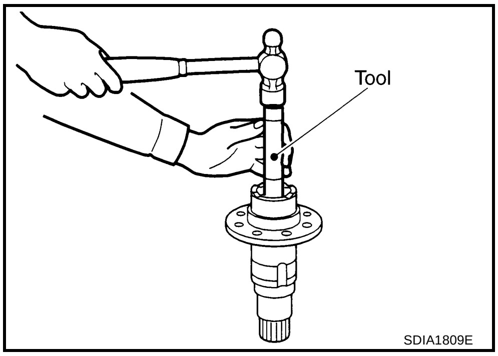

2. Apply thread locking sealant into thread hole for drive gear.
   - **Use Genuine High Strength Thread Locking Sealant or equivalent. Refer to GI-48, "Recommended Chemical Products and Sealants" .**

a. Completely clean and degrease the drive gear back face, thread holes, and drive gear mounting bolts.

b. Apply thread locking sealant onto the first and second threads under thread hole chamfering of drive gear on 3 or more different points.
   - **Use Genuine High Strength Thread Locking Sealant or equivalent. Refer to GI-48, "Recommended Chemical Products and Sealants" .**

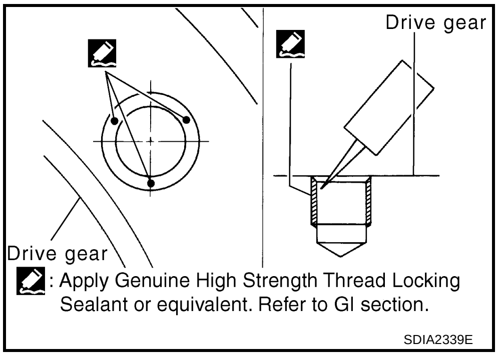

3. Install drive gear to gear ring, and apply anti-corrosive oil onto threads and seats on the mounting bolts. Tighten to the specified torque. Refer to TF-50, "COMPONENTS" .

   CAUTION:
   - **Temporary installation before tightening the bolts through to the completion of the tightening should be within 90 seconds.**
   - **If the thread locking sealant is applied aside, quickly wipe it off.**

4. Apply gear oil to gear ring bearing inner race (transfer case side). Install gear ring bearing inner race, using the drifts.

   Tool number A: ST30720000 (J-25405)
   B: ST27863000 (—)
   C: KV40101630 (J-35870)

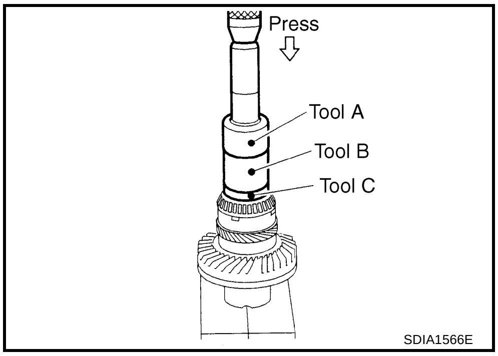

5. Apply gear oil to gear ring bearing inner race (adapter case side). Install gear ring bearing inner race, using the drifts.

   Tool number A: ST30720000 (J-25405)
   B: KV38102510 (—)

6. Install drive gear assembly to transfer case.
7. Install adapter case.
8. Check backlash, preload torque, tooth contact, and companion flange runout. Refer to TF-51, "ASSEMBLY INSPECTION" .

   CAUTION:
   Measure the total preload torque without oil seal.

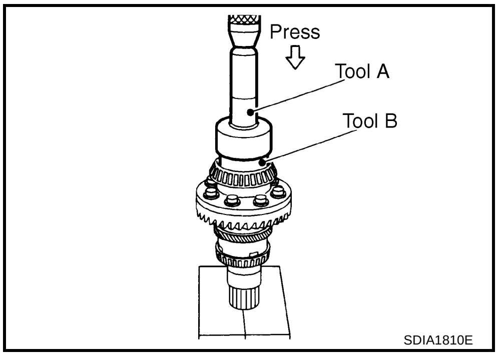

Adapter Case

1. Select gear ring bearing adjusting shim (adapter case side). Refer to TF-60, "SELECTING ADJUSTING SHIMS" .
2. Install oil gutter.
3. Install selected gear ring bearing adjusting shim (adapter case side) and gear ring bearing outer race (adapter case side), using the drifts.

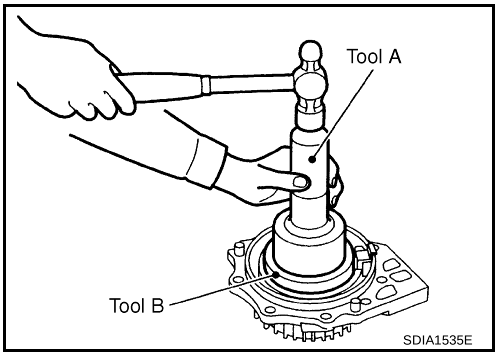

Tool number A: ST30720000 (J-25405)
B: KV40105230 (—)

4. Drive adapter case oil seal until it becomes flush with the case end, using the drift.

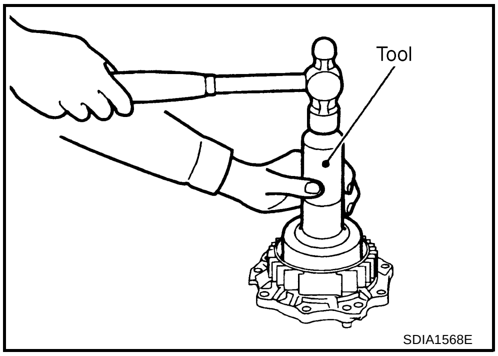

Tool number : KV38101700 (—)

CAUTION:
- **When checking the total preload torque, measure it without oil seal, then install oil seal.**
- **Do not reuse oil seal.**
- **Apply multi-purpose grease onto oil seal lips, and gear oil onto the circumference of oil seal.**

5. Apply sealant on drain plug and install it to the adapter case. Refer to TF-50, "COMPONENTS" .
   - **Use Genuine Silicone RTV or equivalent. Refer to GI-48, "Recommended Chemical Products and Sealants" .**
6. Apply multi-purpose grease lightly and evenly onto O-ring, and install it to the adapter case.

CAUTION:
Do not reuse the O-ring.

7. Install adapter case to transfer case, and apply anti-corrosive oil onto threads and seats on the mounting bolts. Tighten to the specified torque.

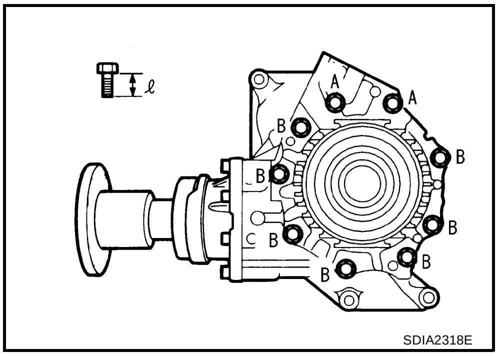

Bolt symbol	Bolt length "ℓ" mm (in)	Tightening torque N·m (kg-m, ft-lb)
A	35 (1.38)	15.2 (1.6, 11)
B	30 (1.18)	

8. Check backlash, preload torque, tooth contact, and companion flange runout. Refer to TF-51, "ASSEMBLY INSPECTION" .

CAUTION:
Measure the total preload torque without oil seal.

Pinion Sleeve Assembly

1. Select pinion sleeve shim. Refer to TF-60, "SELECTING ADJUSTING SHIMS" .
2. Install dust cover.
3. Install pinion rear bearing outer race, using the drift.

   Tool number : KV38100300 (J-25523)

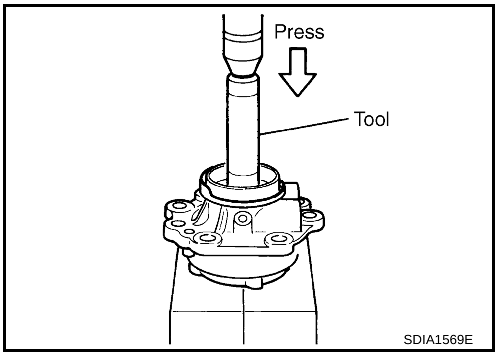

4. Install pinion front bearing outer race, using the drifts.

   Tool number A: ST33400001 (J-26082)
   B: ST30901000 (J-26010-01)

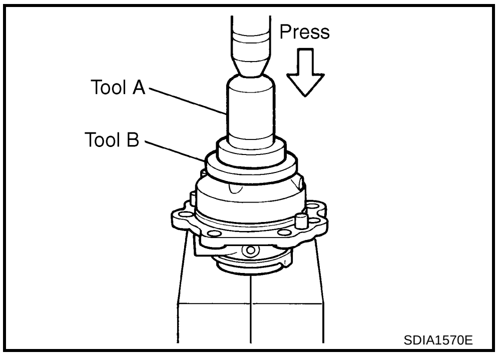

5. Apply gear oil to pinion front bearing inner race and mating position on drive pinion. Install pinion front bearing inner race to drive pinion, using the drift.

   Tool number : ST30901000 (J-26010-01)

6. Install collapsible spacer to drive pinion.

   CAUTION:
   Do not reuse collapsible spacer.
7. Apply gear oil to pinion rear bearing inner race and install it to pinion sleeve.

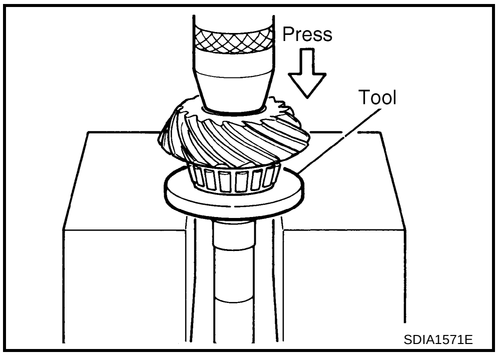

8. Install pinion sleeve oil seal to pinion sleeve, using the drift.

   Tool number : ST33400001 (J-26082)

   CAUTION:
   - **Do not reuse oil seal.**
   - **Apply multi-purpose grease onto oil seal lips, and gear oil onto the circumference of oil seal.**

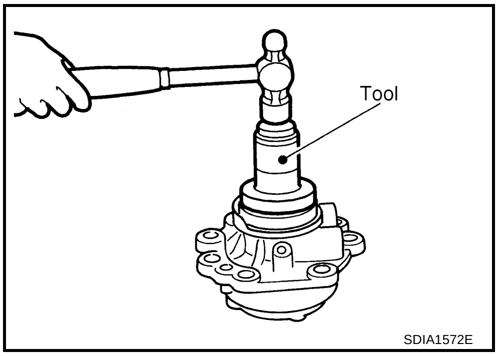

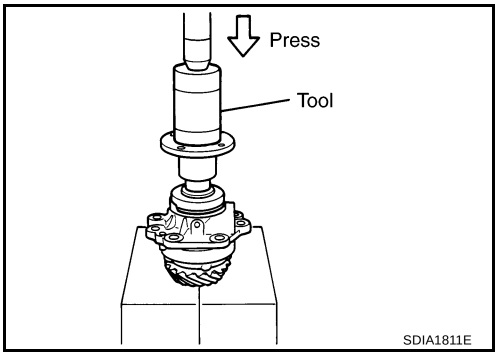

9. Press in companion flange, using the drift.

   Tool number : ST33200000 (J-26082)

10. Apply anti-corrosion oil onto threads and seat of pinion lock nut. Adjust pinion lock nut tightening torque and pinion bearing preload torque (P'1), using the preload gauge.

    Pinion lock nut tightening torque

    : 128 - 294 N·m (13 - 29 kg-m, 95 - 216 ft-lb)

    Pinion bearing preload torque (P'1):

    0.40 - 0.78 N·m (0.04 - 0.08 kg-m, 4 - 6 in-lb)

    CAUTION:
    - **Do not reuse pinion lock nut.**
    - **Adjust the lower limit of the pinion lock nut tightening torque first.**
    - **While confirming the preload torque, tighten pinion lock nut by 5° to 10°. Because preload will increase suddenly.**
    - **If specified preload torque is exceeded, replace collapsible spacer and tighten again. Do not loosen pinion lock nut for further preload torque adjustment.**
    - **After the adjustment, rotate companion flange back and forth 2 to 3 times to check for unusual noise, rotation malfunction, and other malfunctions.**

11. Apply multi-purpose grease lightly and evenly onto O-ring, and install it to pinion sleeve.

    CAUTION:
    Do not reuse old O-ring.

12. Assemble selected pinion sleeve shim.
13. Install pinion sleeve assembly, and apply anti-corrosive oil onto threads and seats on the mounting bolts. Tighten to the specified torque. Refer to TF-50, "COMPONENTS" .
14. Check backlash, preload torque, tooth contact and companion flange runout. Refer to TF-51, "ASSEMBLY INSPECTION" .
    The total preload torque is as follows:

    Total preload torque

    With all oil seals:

    P'1 + 0.45 - 0.47 N·m (0.045 - 0.048 kg-m, 3.9 - 4.1 in-lb)

    Without transfer case oil seal and adapter case oil seal:

    P'1 + 0.35 - 0.37 N·m (0.035 - 0.038 kg-m, 3.1 - 3.2 in-lb)

SERVICE DATA AND SPECIFICATIONS (SDS)

PFP:00030

General Specifications

ADS00184

Applied model		QR25DE
Transfer model		TY20A
Oil capacity (Approx.) ℓ (US pt, Imp pt)		0.31 (5/8, 1/2)
Gear ratio		0.404
Number of teeth	Drive pinion	17
	Drive gear	42

Inspection and Adjustment

ADS00185

PRELOAD TORQUE BEFORE DISASSEMBLY

Item		Specification [N·m (kg-m, in-lb)]
Pinion bearing (P_1)		0.10 - 0.39 (0.01 - 0.04, 1 - 3)
Gear ring bearing to pinion bearing (Total preload)	With all oil seals	P_1 + 0.16 - 0.22 (0.016 - 0.023, 1.4 - 1.9)
	Without transfer case oil seal and adapter case oil seal	P_1 + 0.06 - 0.12 (0.006 - 0.013, 0.6 - 1.1)

PRELOAD TORQUE AFTER DISASSEMBLY AND REASSEMBLY

Item		Specification [N·m (kg-m, in-lb)]
Pinion bearing (P'_1)		0.40 - 0.78 (0.04 - 0.08, 4 - 6)
Gear ring bearing to pinion bearing (Total preload)	With all oil seals	P'_1 + 0.45 - 0.47 (0.045 - 0.048, 3.9 - 4.1)
	Without transfer case oil seal and adapter case oil seal	P'_1 + 0.35 - 0.37 (0.035 - 0.038, 3.1 - 3.2)

BACKLASH

Unit: mm (in)

Item	Specification
Drive gear to drive pinion gear	0.13 - 0.19 (0.0051 - 0.0075)

COMPANION FLANGE RUNOUT

Unit: mm (in)

Item	Runout limit
Companion flange face	0.1 (0.004)
Inner side of the companion flange	0.1 (0.004)

SELECTIVE PARTS

Gear Ring Bearing Adjusting Shim (Transfer Case Side)

Unit: mm (in)

Thickness	Part number*	Thickness	Part number*	Thickness	Part number*
0.80 (0.0315)	33147 AD300	1.22 (0.0480)	33147 AD314	1.64 (0.0646)	33147 AD363
0.83 (0.0327)	33147 AD301	1.25 (0.0492)	33147 AD315	1.67 (0.0657)	33147 AD364
0.86 (0.0339)	33147 AD302	1.28 (0.0504)	33147 AD316	1.70 (0.0669)	33147 AD365
0.89 (0.0350)	33147 AD303	1.31 (0.0516)	33147 AD317	1.73 (0.0681)	33147 AD366
0.92 (0.0362)	33147 AD304	1.34 (0.0528)	33147 AD318	1.76 (0.0693)	33147 AD367
0.95 (0.0374)	33147 AD305	1.37 (0.0539)	33147 AD319	1.79 (0.0705)	33147 AD368
0.98 (0.0386)	33147 AD306	1.40 (0.0551)	33147 AD320	1.82 (0.0717)	33147 AD369
1.01 (0.0398)	33147 AD307	1.43 (0.0563)	33147 AD321	1.85 (0.0728)	33147 AD370
1.04 (0.0409)	33147 AD308	1.46 (0.0575)	33147 AD322	1.88 (0.0740)	33147 AD371
1.07 (0.0421)	33147 AD309	1.49 (0.0587)	33147 AD323	1.91 (0.0752)	33147 AD372
1.10 (0.0433)	33147 AD310	1.52 (0.0598)	33147 AD324	1.94 (0.0764)	33147 AD373
1.13 (0.0445)	33147 AD311	1.55 (0.0610)	33147 AD360	1.97 (0.0776)	33147 AD374
1.16 (0.0457)	33147 AD312	1.58 (0.0622)	33147 AD361	2.00 (0.0787)	33147 AD375
1.19 (0.0469)	33147 AD313	1.61 (0.0634)	33147 AD362	2.03 (0.0799)	33147 AD376

*: Always check with the Parts Department for the latest parts information.

Gear Ring Bearing Adjusting Shim (Adapter Case Side)

Unit: mm (in)

Thickness	Part number*	Thickness	Part number*	Thickness	Part number*
0.80 (0.0315)	33147 5V200	1.25 (0.0492)	33147 5V215	1.70 (0.0669)	33123 5V265
0.83 (0.0327)	33147 5V201	1.28 (0.0504)	33147 5V216	1.73 (0.0681)	33123 5V266
0.86 (0.0339)	33147 5V202	1.31 (0.0516)	33147 5V217	1.76 (0.0693)	33123 5V267
0.89 (0.0350)	33147 5V203	1.34 (0.0528)	33123 5V218	1.79 (0.0705)	33123 5V268
0.92 (0.0362)	33147 5V204	1.37 (0.0539)	33123 5V219	1.82 (0.0717)	33123 5V269
0.95 (0.0374)	33147 5V205	1.40 (0.0551)	33123 5V220	1.85 (0.0728)	33123 5V270
0.98 (0.0386)	33147 5V206	1.43 (0.0563)	33123 5V221	1.88 (0.0740)	33123 5V271
1.01 (0.0398)	33147 5V207	1.46 (0.0575)	33123 5V222	1.91 (0.0752)	33123 5V272
1.04 (0.0409)	33147 5V208	1.49 (0.0587)	33123 5V223	1.94 (0.0764)	33123 5V273
1.07 (0.0421)	33147 5V209	1.52 (0.0598)	33123 5V224	1.97 (0.0776)	33123 5V274
1.10 (0.0433)	33147 5V210	1.55 (0.0610)	33123 5V260	2.00 (0.0787)	33123 5V275
1.13 (0.0445)	33147 5V211	1.58 (0.0622)	33123 5V261	2.03 (0.0799)	33123 5V276
1.16 (0.0457)	33147 5V212	1.61 (0.0634)	33123 5V262	2.06 (0.0811)	33123 5V277
1.19 (0.0469)	33147 5V213	1.64 (0.0646)	33123 5V263	2.09 (0.0811)	33123 5V278
1.22 (0.0480)	33147 5V214	1.67 (0.0657)	33123 5V264		

*: Always check with the Parts Department for the latest parts information.

Pinion Sleeve Shim

Unit: mm (in)

Thickness	Part number*	Thickness	Part number*	Thickness	Part number*
0.77 (0.0303)	33155 5V214	0.98 (0.0386)	33155 5V206	1.19 (0.0469)	33155 5V213
0.80 (0.0315)	33155 5V200	1.01 (0.0398)	33155 5V207	1.22 (0.0480)	33155 5V215
0.83 (0.0327)	33155 5V201	1.04 (0.0409)	33155 5V208	1.25 (0.0492)	33155 5V216
0.86 (0.0339)	33155 5V202	1.07 (0.0421)	33155 5V209	1.28 (0.0504)	33155 5V217
0.89 (0.0350)	33155 5V203	1.10 (0.0433)	33155 5V210	1.31 (0.0516)	33155 5V218
0.92 (0.0362)	33155 5V204	1.13 (0.0445)	33155 5V211	1.34 (0.0528)	33155 5V219
0.95 (0.0374)	33155 5V205	1.16 (0.0457)	33155 5V212		

*: Always check with the Parts Department for the latest parts information.